HT-6800DP/DDW960

SERVICE MANUAL

US Model

Ver 1.0 2004. 06

- HT-6800DP/DDW960 are composed of the following models. As service manuals are issued for each component model, please refer to them.

COMPONENT MODEL NAME

	HT-6800DP	HT-DDW960
FM/AM RECEIVER	STR-K6800P	STR-K6800P
FRONT/SURROUND/ SURROUND BACK SPEAKER	SS-MSP88	SS-MSP88
CENTER SPEAKER	SS-CNP88	SS-CNP88
SUB WOOFER	SA-WMSP68	SA-WMSP68
CD/DVD PLAYER	DVP-NC675P	—

PARTS LIST

Part No.	Description	Remark
	ACCESSORIES **********	
1-478-620-11	COMMANDER, STANDARD (RM-PP860) (including BATTERY COVER)	
1-501-374-12	ANTENNA, LOOP (AM)	
1-751-347-13	CORD, CONNECTION (10m) (for SPEAKER)	
1-769-329-21	CORD, CONNECTION (PIN-PIN) (MONAURAL CORD)	
1-769-433-62	CORD, SPEAKER (3.5m) (for SPEAKER)	
1-793-184-23	CONNECTOR (F TYPE ADAPTOR) (FM)	
1-823-135-13	CORD (CONNECTION) (COAXIAL DIGITAL CORD)	
2-021-076-01	FOOT (for SS-CNP88/MSP88)	
4-235-237-01	FOOT (for SA-WMSP68)	
4-252-273-11	MANUAL, INSTRUCTION (ENGLISH) (6800DP)	
4-255-298-61	MANUAL, INSTRUCTION (ENGLISH) (DDW960)	

HOME THEATER SYSTEM

9-879-032-01
2004F04-1
© 2004. 06

Sony Corporation
Home Audio Company
Published by Sony Engineering Corporation

SONY®

REVISION HISTORY

Clicking the version allows you to jump to the revised page.
Also, clicking the version at the upper on the revised page allows you to jump to the next revised page.

Ver.	Date	Description of Revision
1.0	2004. 06	New

STR-DE597P/K6800P

SERVICE MANUAL

Ver 1.0 2004. 06

US Model
STR-K6800P
AEP Model
UK Model
Australian Model
STR-DE597P

• STR-DE597P/K6800P are the FM/AM receiver section in HT-DDW860/6800DP.

Photo: STR-K6800P

Manufactured under license from Dolby Laboratories.
"Dolby", "Pro Logic" and the double-D symbol are trademarks of Dolby Laboratories.
"DTS", "DTS-ES", "Neo:6" are trademarks of Digital Theater Systems, Inc.

SPECIFICATIONS

AUDIO POWER SPECIFICATIONS

POWER OUTPUT AND TOTAL HARMONIC DISTORTION:
(Models of area code US only)
With 8 ohm loads, both channels driven, from 120 – 20,000 Hz; rated 90 watts per channel minimum RMS power, with no more than 0.7 % total harmonic distortion from 250 milliwatts to rated output.

Amplifier section
Power Output [1)]
Models of area code US
(8 ohms 1 kHz, THD 10 %)
FRONT [2)] : 120 W/ch
CENTER [2)] : 120 W
SURR [2)] : 120 W/ch
SURR BACK [2)] : 120 W

Models of area code AEP, UK
(8 ohms 1 kHz, THD 0.7 %)
FRONT [2)] : 100 W/ch
CENTER [2)] : 100 W
SURR [2)] : 100 W/ch
SURR BACK [2)] : 100 W

(8 ohms 1 kHz, THD 10 %)
FRONT [2)] : 120 W/ch
CENTER [2)] : 120 W
SURR [2)] : 120 W/ch
SURR BACK [2)] : 120 W

Models of area code AUS
(8 ohms 120 Hz – 20 kHz, THD 0.09 %)
FRONT [2)] : 80 W/ch
CENTER [2)] : 80 W
SURR [2)] : 80 W/ch
SURR BACK [2)] : 80 W

(8 ohms 1 kHz, THD 0.7 %)
FRONT [2)] : 100 W/ch
CENTER [2)] : 100 W
SURR [2)] : 100 W/ch
SURR BACK [2)] : 100 W

(8 ohms 1 kHz, THD 10 %)
FRONT [2)] : 120 W/ch
CENTER [2)] : 120 W
SURR [2)] : 120 W/ch
SURR BACK [2)] : 120 W

1) Measured under the following conditions:

Area code	Power requirements
US	120 V AC, 60 Hz
AEP, UK	230 V AC, 50 Hz
AUS	240 V AC, 50 Hz

2) Depending on the sound field settings and the source, there may be no sound output.

– Continued on next page –

FM STEREO/FM-AM RECEIVER

9-879-028-01 **Sony Corporation**
2004F04-1 **Home Audio Company**
© 2004. 06
Published by Sony Engineering Corporation

SONY®

Inputs (Analog)

MULTI CH IN, SA-CD/CD, MD/TAPE, DVD, VIDEO 1, 2	Sensitivity: 800 mV Impedance: 50 kiloohms

Inputs (Digital)

DVD (Coaxial)	Sensitivity: – Impedance: 75 ohms
VIDEO 2, SA-CD/CD (Optical)	Sensitivity: – Impedance: –

Outputs (Analog)

MD/TAPE (OUT), VIDEO 1 (AUDIO OUT)	Voltage: 800 mV Impedance: 10 kiloohms
SUB WOOFER	Voltage: 2 V Impedance: 1 kiloohms

Reproduction frequency range:
28 – 20,000 Hz

Tone

Gain levels	±6 dB, 1 dB step

FM tuner section

Tuning range 87.5 – 108.0 MHz
Antenna FM wire antenna
Antenna terminals 75 ohms, unbalanced
Intermediate frequency 10.7 MHz

AM tuner section

Tuning range
Models of area code US
With 10-kHz tuning scale: 530 – 1,710 kHz 3)
With 9-kHz tuning scale: 531 – 1,710 kHz 3)
Models of area code AEP, UK, AUS
With 9-kHz tuning scale: 531 – 1,602 kHz
Antenna Loop antenna
Intermediate frequency 450 kHz

3) You can change the AM tuning scale to 9 kHz or 10 kHz. After tuning in any AM station, turn off the receiver. While holding down PRESET TUNING + or TUNING +, press I/⏻. All preset stations will be erased when you change the tuning scale. To reset the scale to 10 kHz (or 9 kHz), repeat the procedure.

Video section

Inputs/Outputs
Video: 1 Vp-p, 75 ohms
COMPONENT VIDEO:
(Except for models of area code AEP, UK)
Y: 1 Vp-p, 75 ohms
PB/CB/B-Y: 0.7 Vp-p, 75 ohms
PR/CR/R-Y: 0.7 Vp-p, 75 ohms
80 MHz HD Pass Through

General

Power requirements

Area code	Power requirements
US	120 V AC, 60 Hz
AEP, UK	230 V AC, 50/60 Hz
AUS	240 V AC, 50 Hz

Power consumption 220 W

Power consumption (during standby mode)
0.3 W
Dimensions (w/h/d) (Approx.)
430 × 157.5 × 312 mm (16 7/8 × 6 2/8 × 12 2/8 inches) including projecting parts and controls
Mass (Approx.) 8.0 kg (17 lb 11 oz)

Design and specifications are subject to change without notice.

- Abbreviation
  AUS : Australian model

SAFETY CHECK-OUT

After correcting the original service problem, perform the following safety check before releasing the set to the customer:
Check the antenna terminals, metal trim, "metallized" knobs, screws, and all other exposed metal parts for AC leakage.
Check leakage as described below.

LEAKAGE TEST

The AC leakage from any exposed metal part to earth ground and from all exposed metal parts to any exposed metal part having a return to chassis, must not exceed 0.5 mA (500 microampers.). Leakage current can be measured by any one of three methods.

1. A commercial leakage tester, such as the Simpson 229 or RCA WT-540A. Follow the manufacturers' instructions to use these instruments.
2. A battery-operated AC milliammeter. The Data Precision 245 digital multimeter is suitable for this job.
3. Measuring the voltage drop across a resistor by means of a VOM or battery-operated AC voltmeter. The "limit" indication is 0.75 V, so analog meters must have an accurate low-voltage scale. The Simpson 250 and Sanwa SH-63Trd are examples of a passive VOM that is suitable. Nearly all battery operated digital multimeters that have a 2 V AC range are suitable. (See Fig. A)

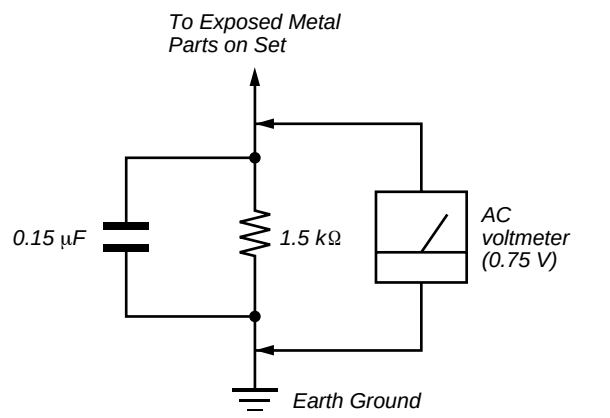

Fig. A. Using an AC voltmeter to check AC leakage.

SAFETY-RELATED COMPONENT WARNING!!

COMPONENTS IDENTIFIED BY MARK ⚠ OR DOTTED LINE WITH MARK ⚠ ON THE SCHEMATIC DIAGRAMS AND IN THE PARTS LIST ARE CRITICAL TO SAFE OPERATION. REPLACE THESE COMPONENTS WITH SONY PARTS WHOSE PART NUMBERS APPEAR AS SHOWN IN THIS MANUAL OR IN SUPPLEMENTS PUBLISHED BY SONY.

MODEL IDENTIFICATION

— BACK PANEL —

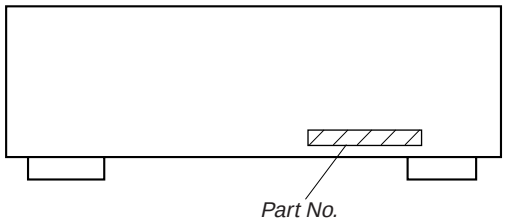

MODEL	PART No.
STR-K6800P: US	4-254-238-0☐
STR-DE597P: AEP	4-254-238-1☐
STR-DE597P: UK	4-254-238-2☐
STR-DE597P: AUS	4-254-238-3☐

- Abbreviation
  AUS : Australian model

TABLE OF CONTENTS

1. GENERAL

Main unit 5
Remote button description 6

2. DISASSEMBLY

2-1. Case 7
2-2. Front Panel Section 8
2-3. Back Panel Section 8
2-4. Digital Board 9
2-5. Standby Board 9
2-6. Main Board 10
2-7. SB AMP Board 10

3. TEST MODE 11

4. DIAGRAMS

4-1. Circuit Boards Location 12
4-2. Block Diagram – Tuner/Audio Section – 13
4-3. Block Diagram – Digital Section – 14
4-4. Block Diagram – Video Section – 15
4-5. Block Diagram – Key/Display Section – 16
4-6. Block Diagram – Power Section – 17
4-7. Printed Wiring Boards – Main Section – 19
4-8. Schematic Diagram – Main Section (1/2) – 20
4-9. Schematic Diagram – Main Section (2/2) – 21
4-10. Printed Wiring Board – Digital Section (1/2) – 22
4-11. Printed Wiring Board – Digital Section (2/2) – 23
4-12. Schematic Diagram – Digital Section (1/3) – 24
4-13. Schematic Diagram – Digital Section (2/3) – 25
4-14. Schematic Diagram – Digital Section (3/3) – 26
4-15. Printed Wiring Boards – Center/Surround Back Speaker Section – 27
4-16. Schematic Diagram – Center/Surround Back Speaker Section – 28
4-17. Printed Wiring Board – Video Section – 29
4-18. Schematic Diagram – Video Section – 30
4-19. Printed Wiring Boards – Display Section – 31
4-20. Schematic Diagram – Display Section – 32
4-21. Printed Wiring Boards – Power Section – 33
4-22. Schematic Diagram – Power Section – 34
4-23. IC Block Diagrams 35

5. EXPLODED VIEWS

5-1. Case Section 42
5-2. Front Panel Section 43
5-3. Back Panel Section 44
5-4. Chassis Section 45

6. ELECTRICAL PARTS LIST 46

SECTION 1
GENERAL

This section is extracted from instruction manual.

List of button locations and reference pages

How to use this page

Use this page to find the location of buttons that are mentioned in the text.

Illustration number
↓
DISPLAY 3 (24, 25, 49)
↑ ↑
Name of button/part Reference page

Main unit

ALPHABETICAL ORDER

A - H

A.F.D. (button/indicator) 11 (27, 28, 29, 48)
DIMMER 4 (25)
DISPLAY 3 (24, 25, 49)
Display 7 (24, 25)
DVD 24 (20)
ENTER 15 (16, 36, 49)
FM MODE 29 (21)

I - O

Input buttons 20 (20, 32, 35, 36, 49)
INPUT MODE 17 (32)
IR (receptor) 5 (39, 49)
MAIN MENU 8 (17, 32, 34, 36)
MASTER VOLUME –/+ 16 (16, 19, 20, 48)
MD/TAPE 23 (20)
MEMORY 30 (22, 23)
MOVIE (button/indicator) 12 (28, 29, 48)
MULTI CHANNEL DECODING (indicator) 6 (21)
MULTI CH IN 9 (21)
MUSIC (button/indicator) 13 (29, 48)

P - Z

PHONES (jack) 31 (20, 48)
PRESET TUNING –/+ 27 (23)
SA-CD/CD 22 (20)
SPEAKERS (OFF/A/B/A+B) 2 (15, 37, 48)
SURR BACK DECODING 14 (30)
TUNER FM/AM 21 (20, 21, 22, 23, 36)
TUNING –/+ 28 (21)
VIDEO 1 26 (20)
VIDEO 2 25 (20)

NUMBERS AND SYMBOLS

2CH (button/indicator) 10 (27, 29, 33)
I/⏻ (power) 1 (16, 17, 22, 33, 49)
</> 19 (17, 32, 34, 36)
+/– 18 (17, 32, 34, 36)

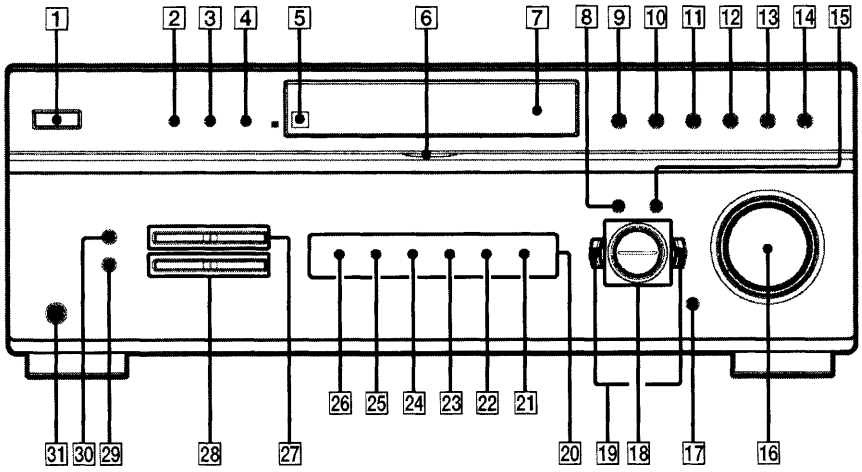

Operations Using the Remote RM-PP860

You can use the remote RM-PP860 to operate the components in your system.

Before you use your remote

Inserting batteries into the remote

Insert R6 (size-AA) batteries with the + and – properly oriented in the battery compartment. When using the remote, point it at the remote sensor ■ on the receiver.

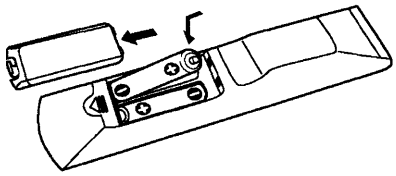

Tip

Under normal conditions, the batteries should last for about 6 months. When the remote no longer operates the receiver, replace all batteries with new ones.

Notes

- Do not leave the remote in an extremely hot or humid place.
- Do not use a new battery with an old one.
- Do not expose the remote sensor to direct sunlight or lighting apparatuses. Doing so may cause a malfunction.
- If you don't use the remote for an extended period of time, remove the batteries to avoid possible damage from battery leakage and corrosion.

Remote button description

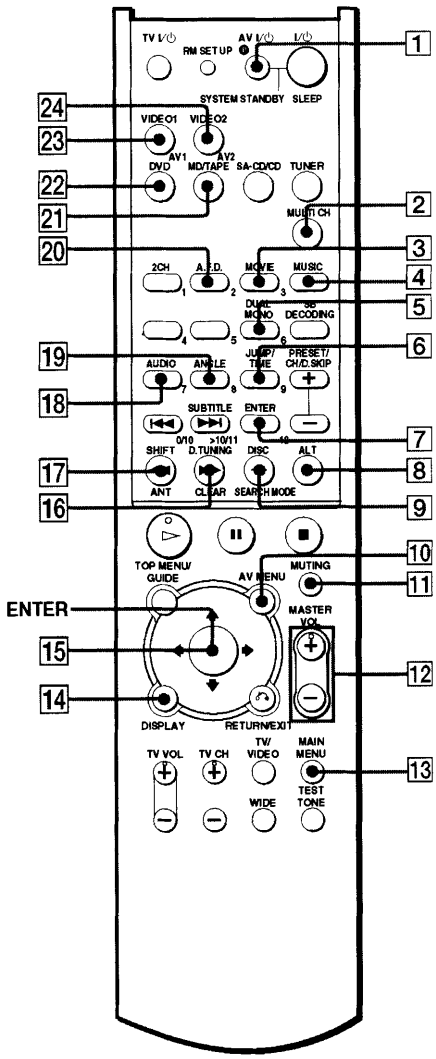

continued

SECTION 2
DISASSEMBLY

Note : This set can be disassemble according to the following sequence.

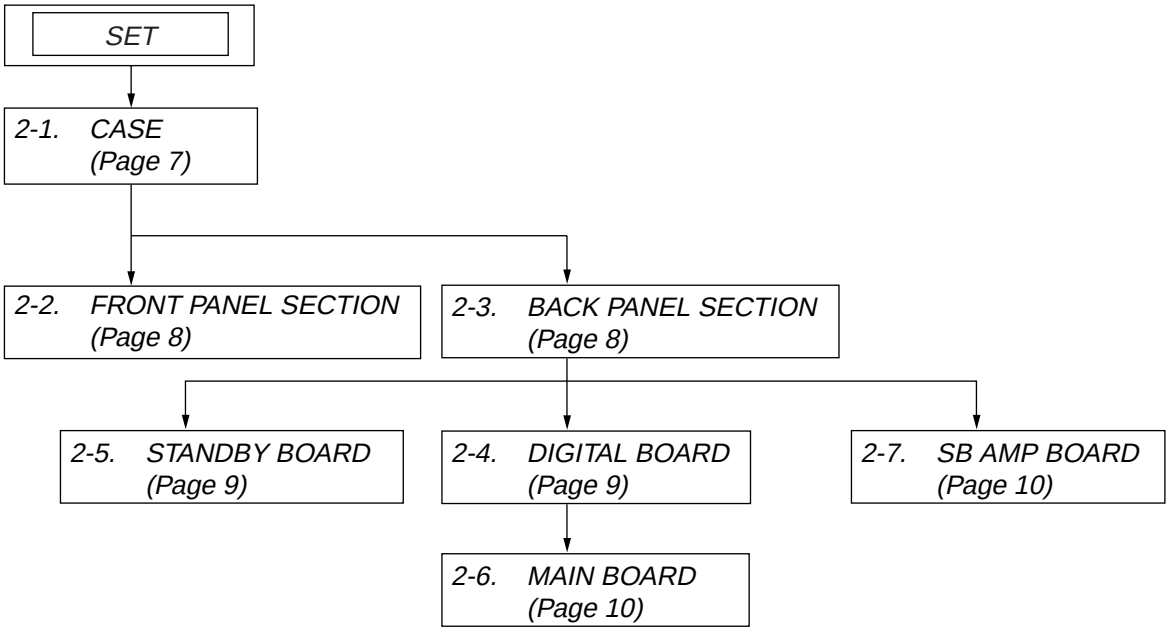

Note : Follow the disassembly procedure in the numerical order given.

2-1. CASE

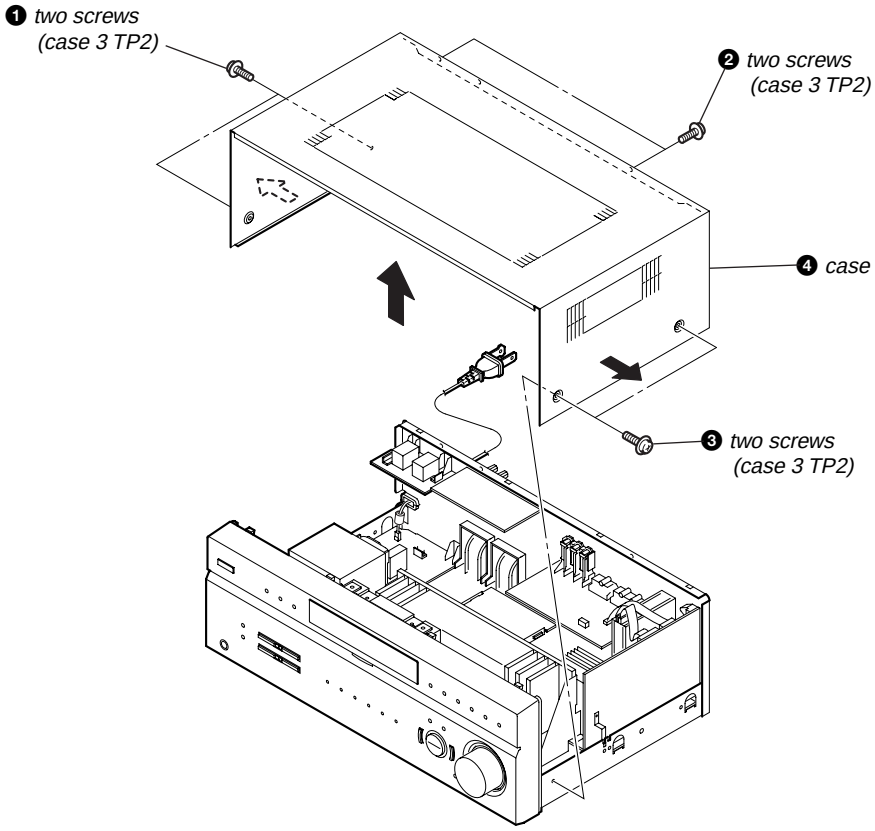

2-2. FRONT PANEL SECTION

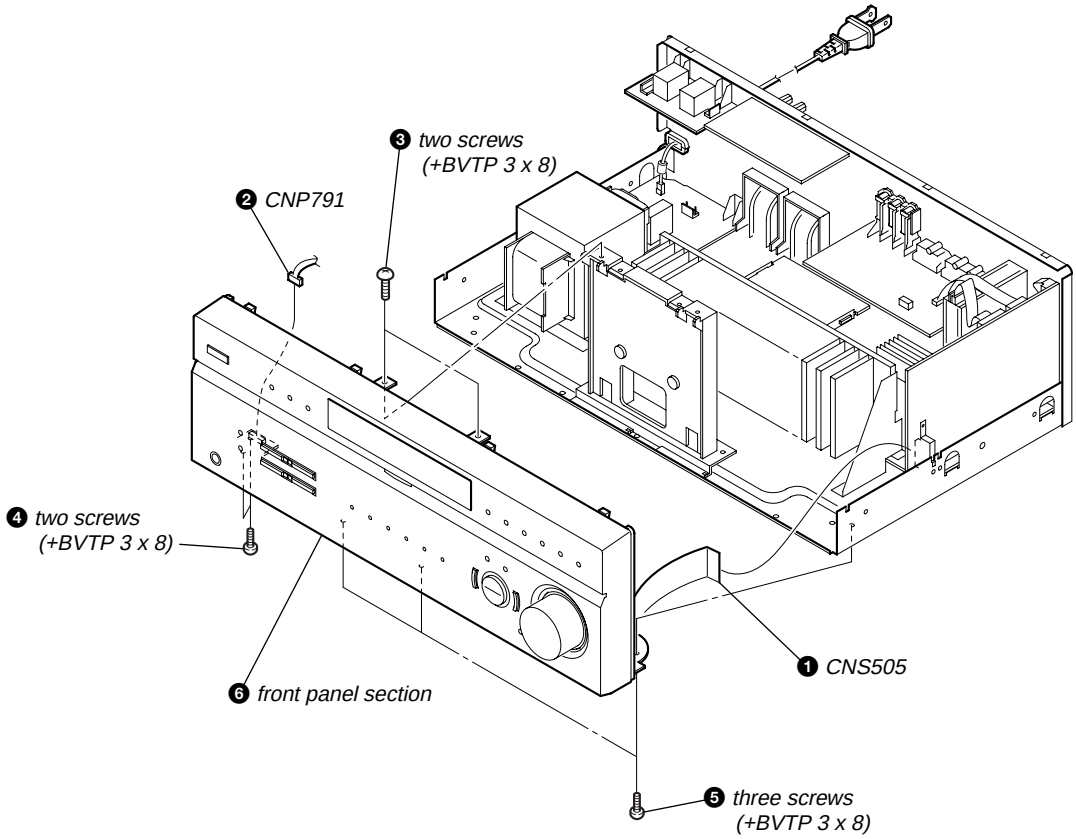

2-3. BACK PANEL SECTION

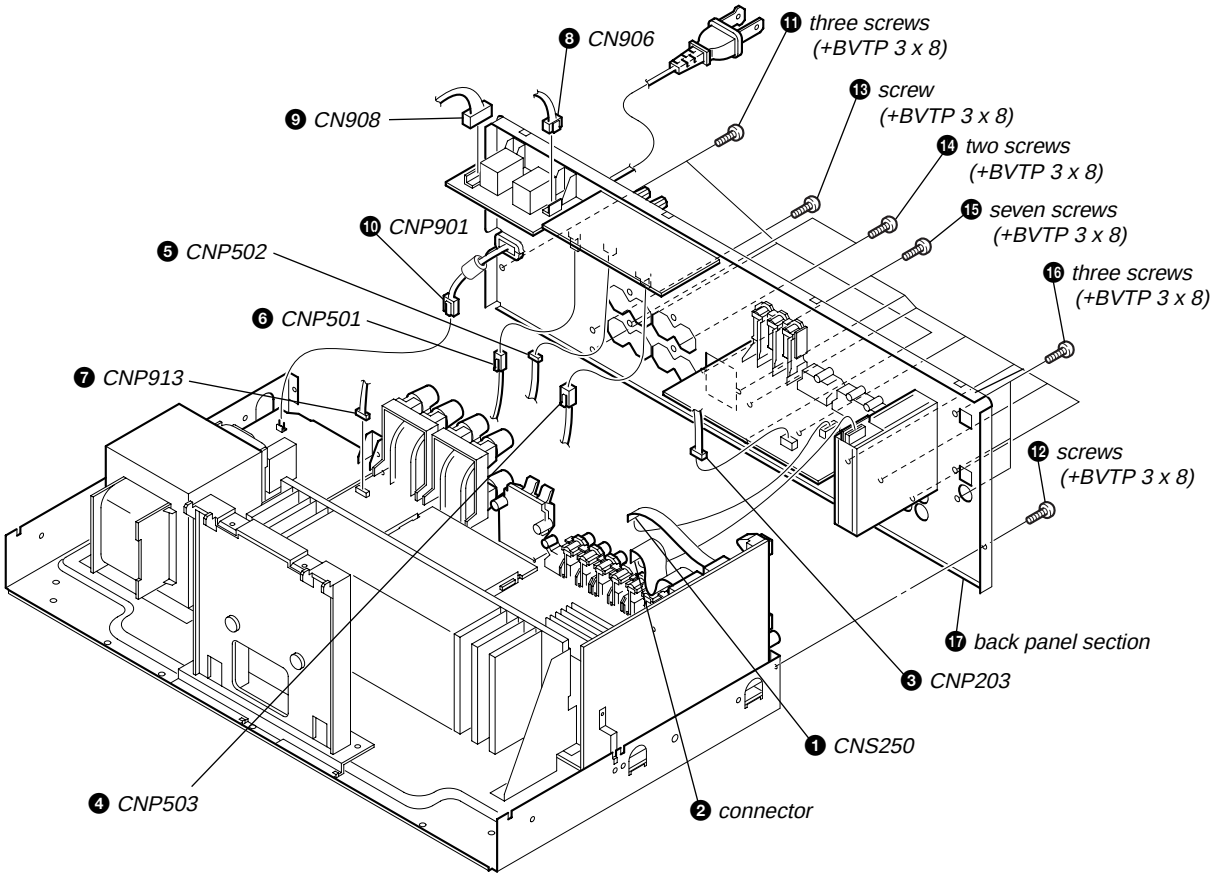

2-4. DIGITAL BOARD

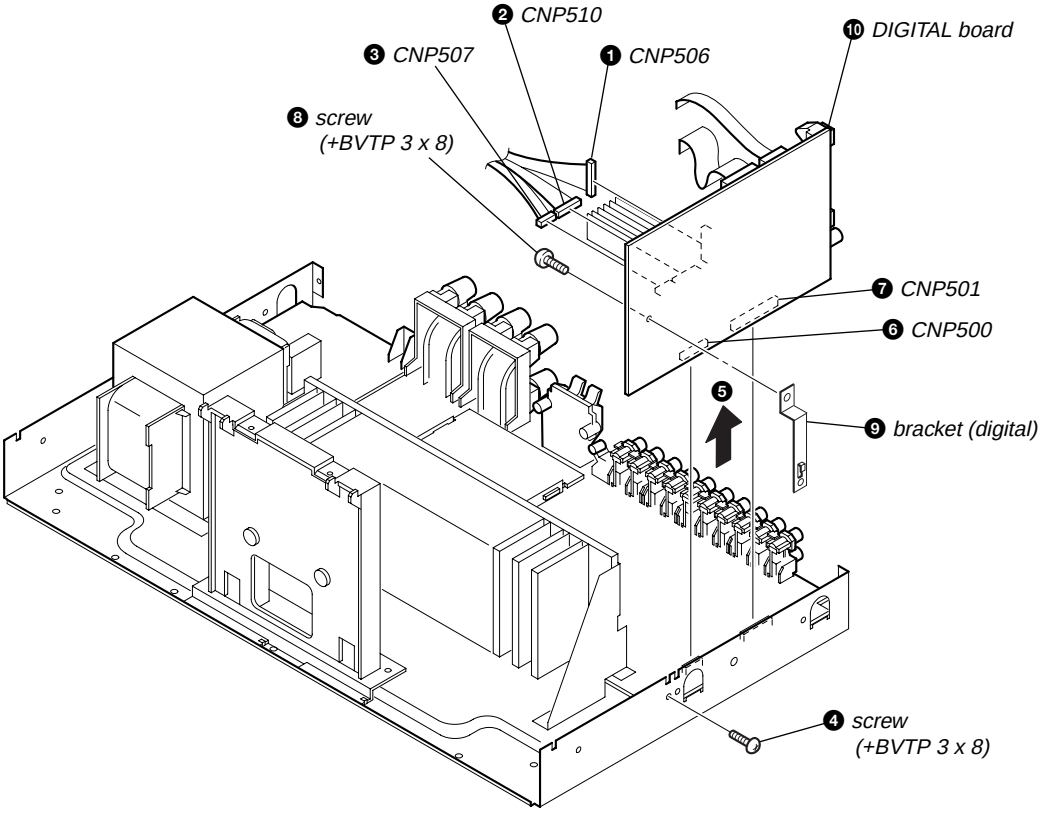

2-5. STANDBY BOARD

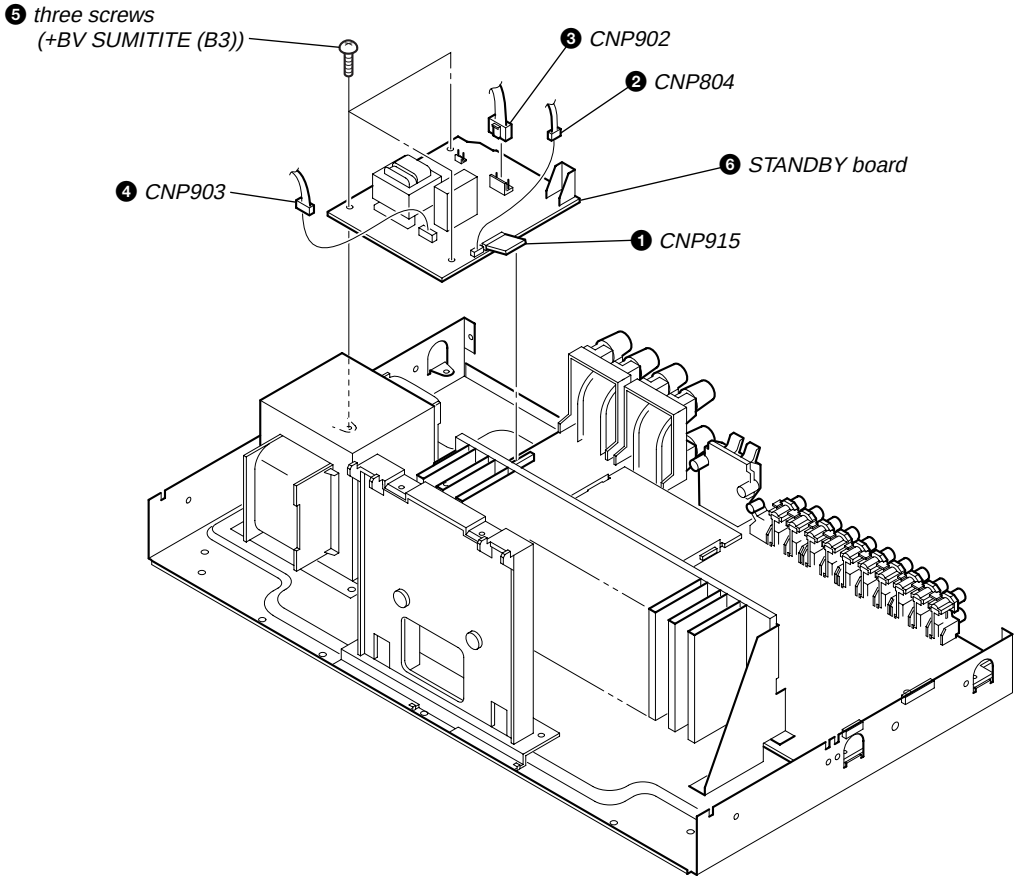

2-6. MAIN BOARD

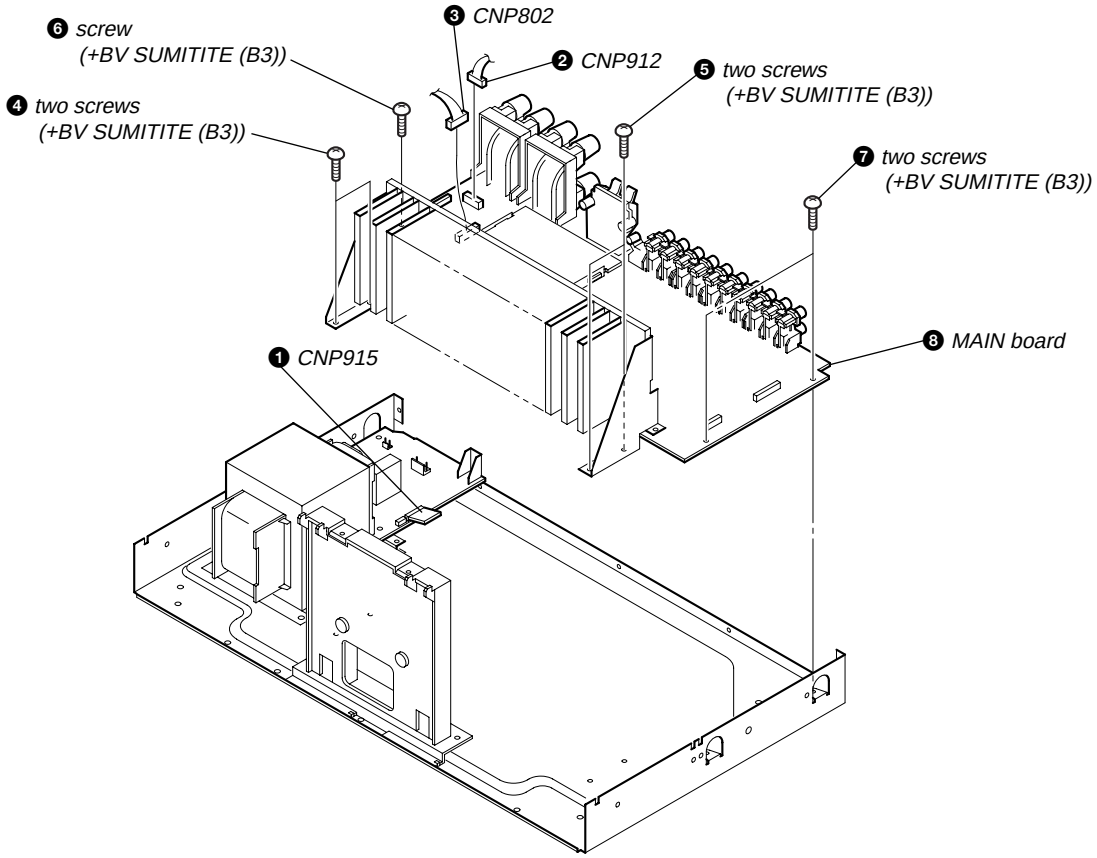

2-7. SB AMP BOARD

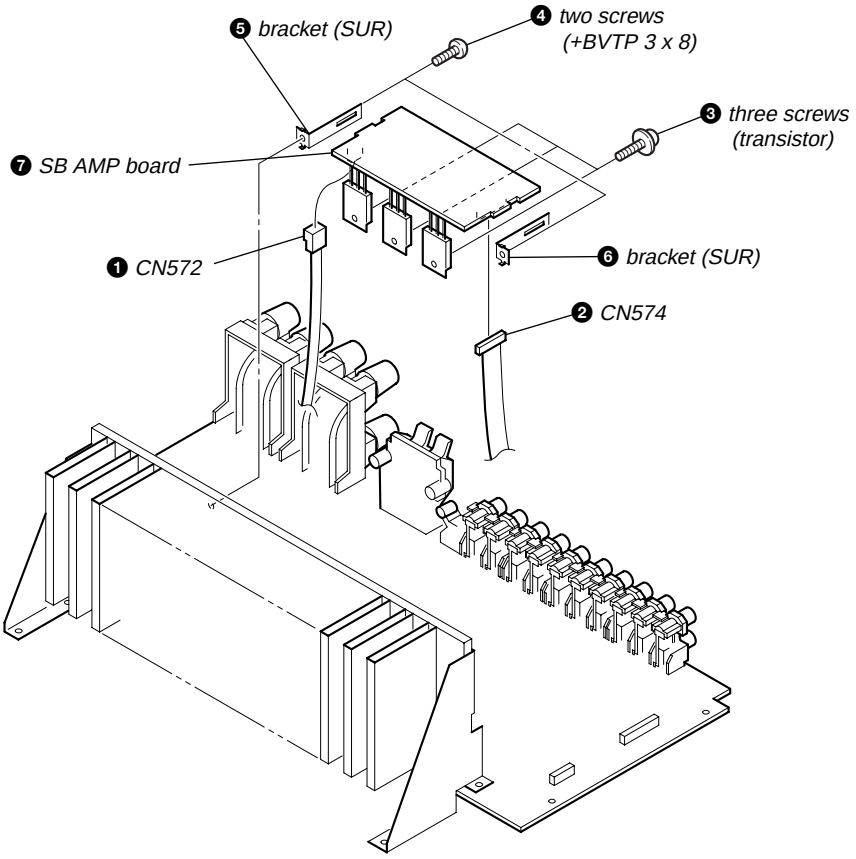

SECTION 3
TEST MODE

FACTORY PRESET MODE

* All preset contents are reset to the default setting.
* Procedure:
  While depressing the [FM MODE] and the [DISPLAY] buttons simultaneously, press the [I/⏻] button to turn on the main power.
  The message "FACTORY" appears for a moment and the present contents are reset to the default values.

AM CHANNEL STEP 9 kHz/10 kHz SELECTION MODE (US model only)

* Either the 9 kHz step or 10 kHz step can be selected for the AM channel step.
* Procedure:
  Press the [TUNER FM/AM] button to set AM and press the [I/⏻] button to turn off the main power.
  While depressing the [PRESET TUNING +] button or the [TUNING +] button, press the [I/⏻] button to turn on the main power.
  Either the message "9k STEP" or "10k STEP" appears for a moment and select the desired step.

SPEAKER SIZE SELECTION MODE

* Either the normal speaker or micro satellite speaker can be selected.
* Procedure:
  While depressing the [DIMMER] button, press the [I/⏻] button to turn on the main power.
  Either the message "NORM. SP." or "MICRO SP." appears for a moment and select the desired speaker size.

VACUUM FLUORESCENT DISPLAY TEST MODE

* All fluorescent segments are tested.
  When this test is activated, all segments light on at the same time, then each segment lights on one after another.
* Procedure:
  While depressing the [TUNING –] and the [SPEAKERS (OFF/A/B/A+B)] buttons simultaneously, press the [I/⏻] button to turn on the main power.

1. ALL segments light on.

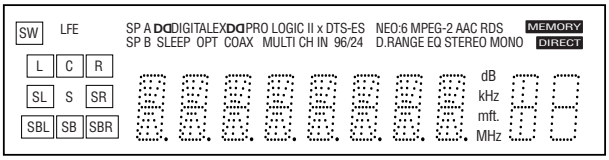

[2CH], [A.F.D.], [MOVIE], [MUSIC] and [MULTI CHANNEL DECODING] LED light on.

2. Press the [VIDEO 1] button, confirm display.

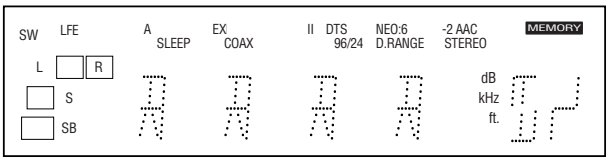

[A.F.D.] and [MUSIC] LED light on.

3. Press the [VIDEO 1] button, confirm display.

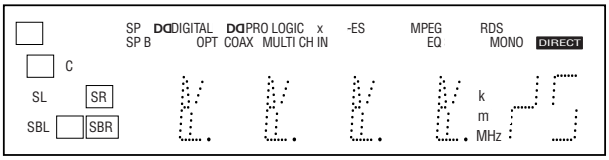

[2CH], [MOVIE] and [MULTI CHANNEL DECODING] LED light on.

4. Press the [VIDEO 1] button, all segments and all LEDs light off.

5. Every pressing the [VIDEO 1] button turns on each segment and LED one after another in the same order.
   (Not only the [VIDEO 1] button, but also the other buttons such as [VIDEO 2], [DVD], [MD/TAPE], [SA-CD/CD] and [TUNER FM/AM] can be used.)

SOUND FIELD CLEAR MODE

* The preset sound field is cleared when this mode is activated.
  Use this mode before returning the product to clients upon completion of repair.
* Procedure:
  While depressing the [2CH] button, press the [I/⏻] button to turn on the main power.
  The message "SF. CLR." appears for a moment and initialization is performed.

SOFTWARE VERSION DISPLAY MODE

* The software version is displayed.
* Procedure:
  While depressing the [TUNING –] and the [DISPLAY] buttons simultaneously, press the [I/⏻] button to turn on the main power.
  The model name, destination and the software version are displayed for a moment.

KEY CHECK MODE

* Button check
* Procedure:
  While depressing the [TUNING –] and the [MAIN MENU] buttons simultaneously, press the [I/⏻] button to turn on the main power.
  Either the message "REST 28" appears.
  Every pressing of any button other than the [I/⏻] counts down the buttons. The buttons which are already counted once are not counted again. When all buttons are pressed "REST 00" appears.

AUTOBETICAL MODE (AEP, UK model only)

* When this mode is used, the receiver scans the broadcasts that can be received by the tuner, and sets up the broadcasts.
  Be sure to start scanning after connecting the antenna.
* Procedure:
  Check that the antenna is connected.
  While depressing the [MEMORY] button, press the [I/⏻] button to turn on the main power.
  The message "AUTO-BETICAL SELECT" appears for a moment and the receiver starts scanning.

COMMAND MODE SELECTION MODE

* The command mode (AV1 or AV2) of the remote commander can be selected.
* Procedure:
  While depressing the [ENTER] button, press the [I/⏻] button to turn on the main power.
  Either the message "C.MODE.AV 1" or "C.MODE.AV 2" appears for a moment and select the desired mode.

SECTION 4
DIAGRAMS

4-1. CIRCUIT BOARDS LOCATION

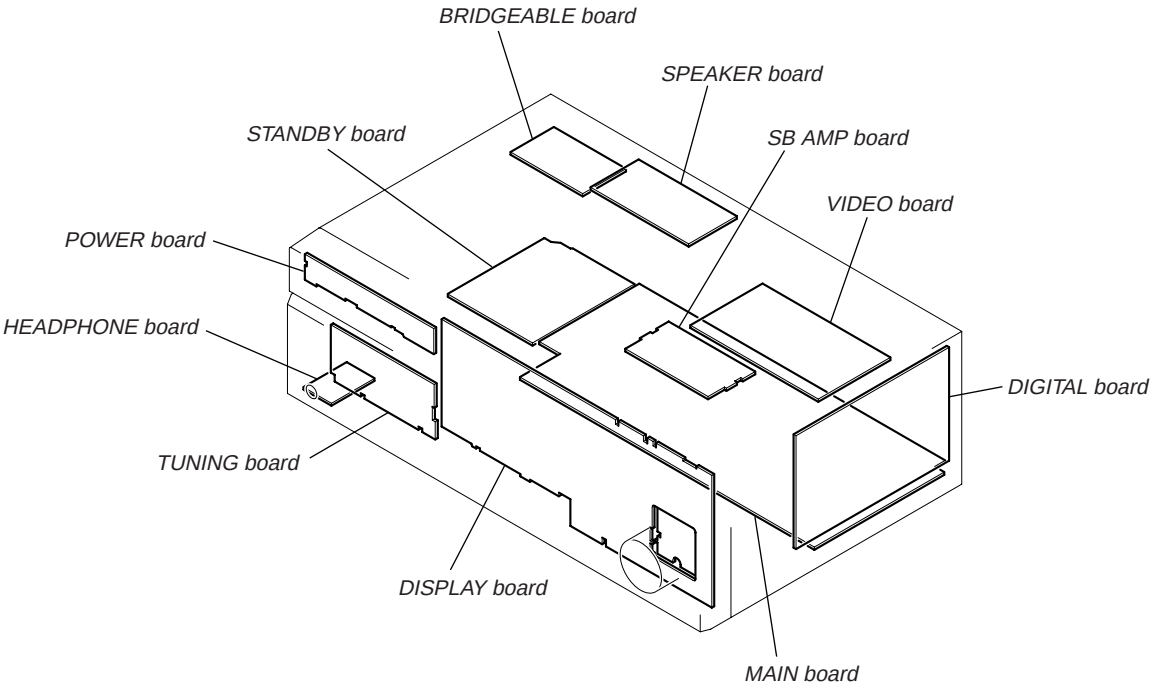

4-2. BLOCK DIAGRAM — TUNER/AUDIO SECTION —

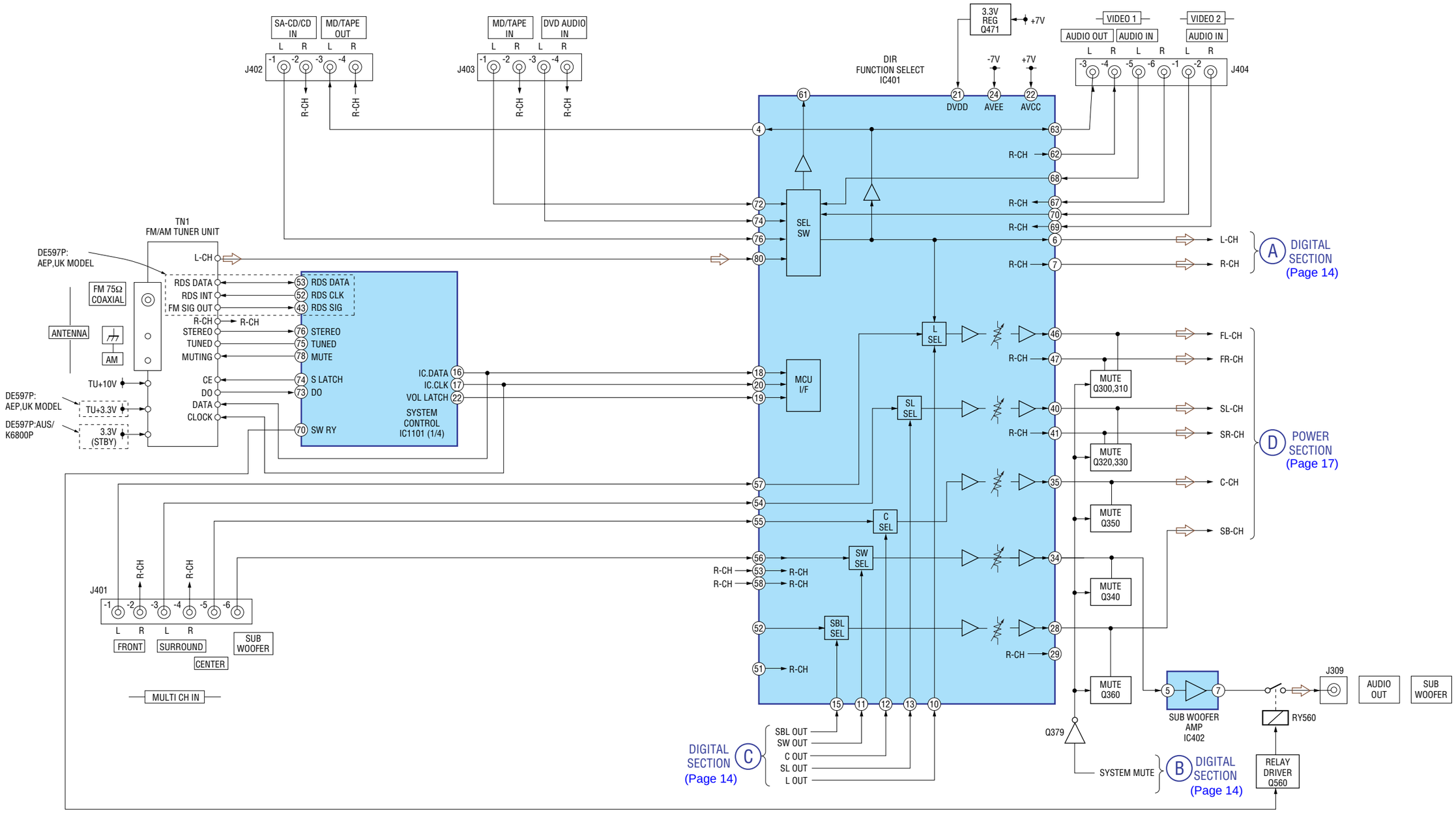

- Signal path
  - ⇨ : TUNER (FM/AM)
  - ⇨ : VIDEO (AUDIO)
- R-ch is omitted due to same as L-ch.
- Abbreviation
  AUS: Australian model

4-3. BLOCK DIAGRAM — DIGITAL SECTION —

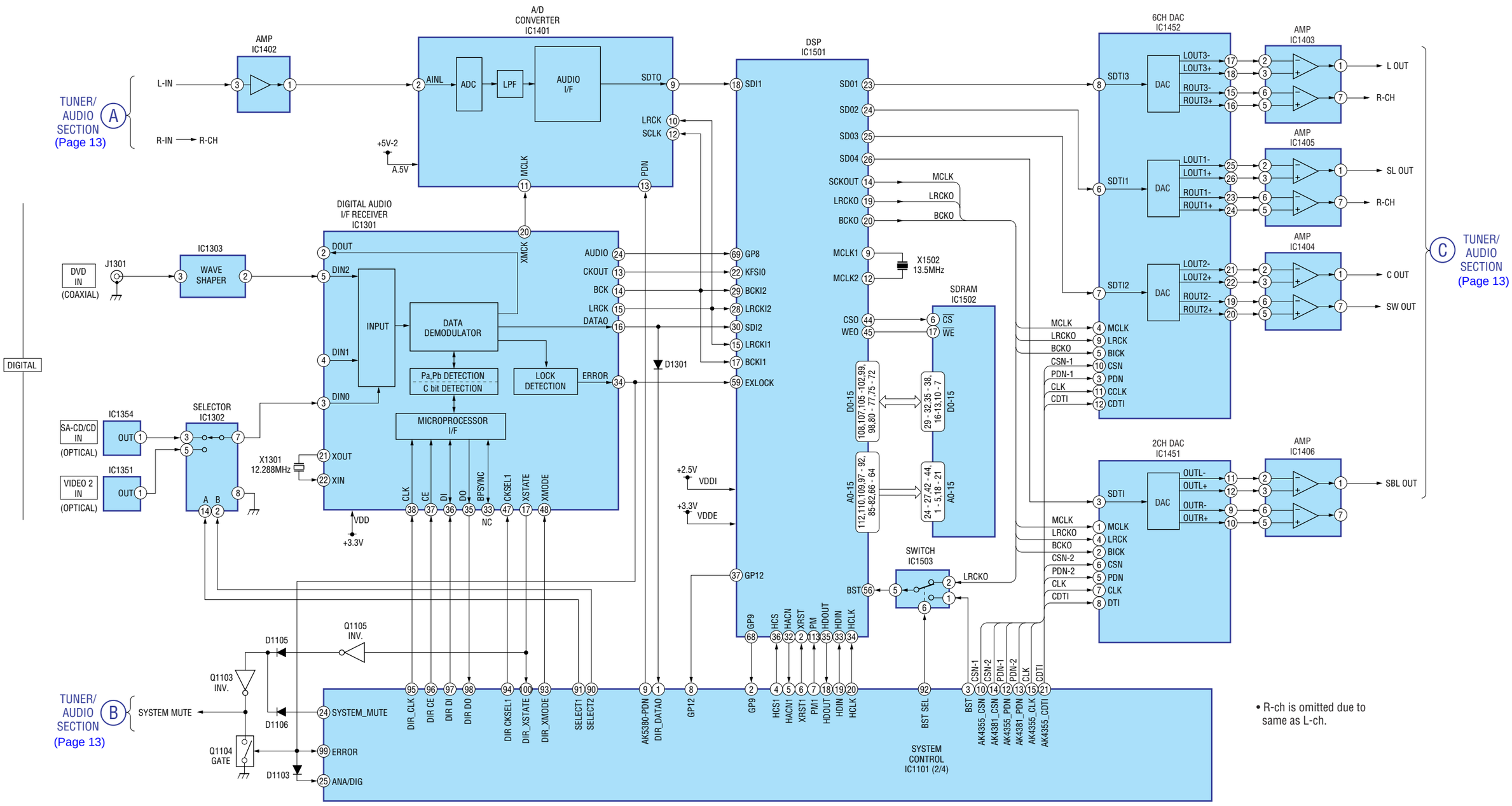

• R-ch is omitted due to same as L-ch.

4-4. BLOCK DIAGRAM — VIDEO SECTION —

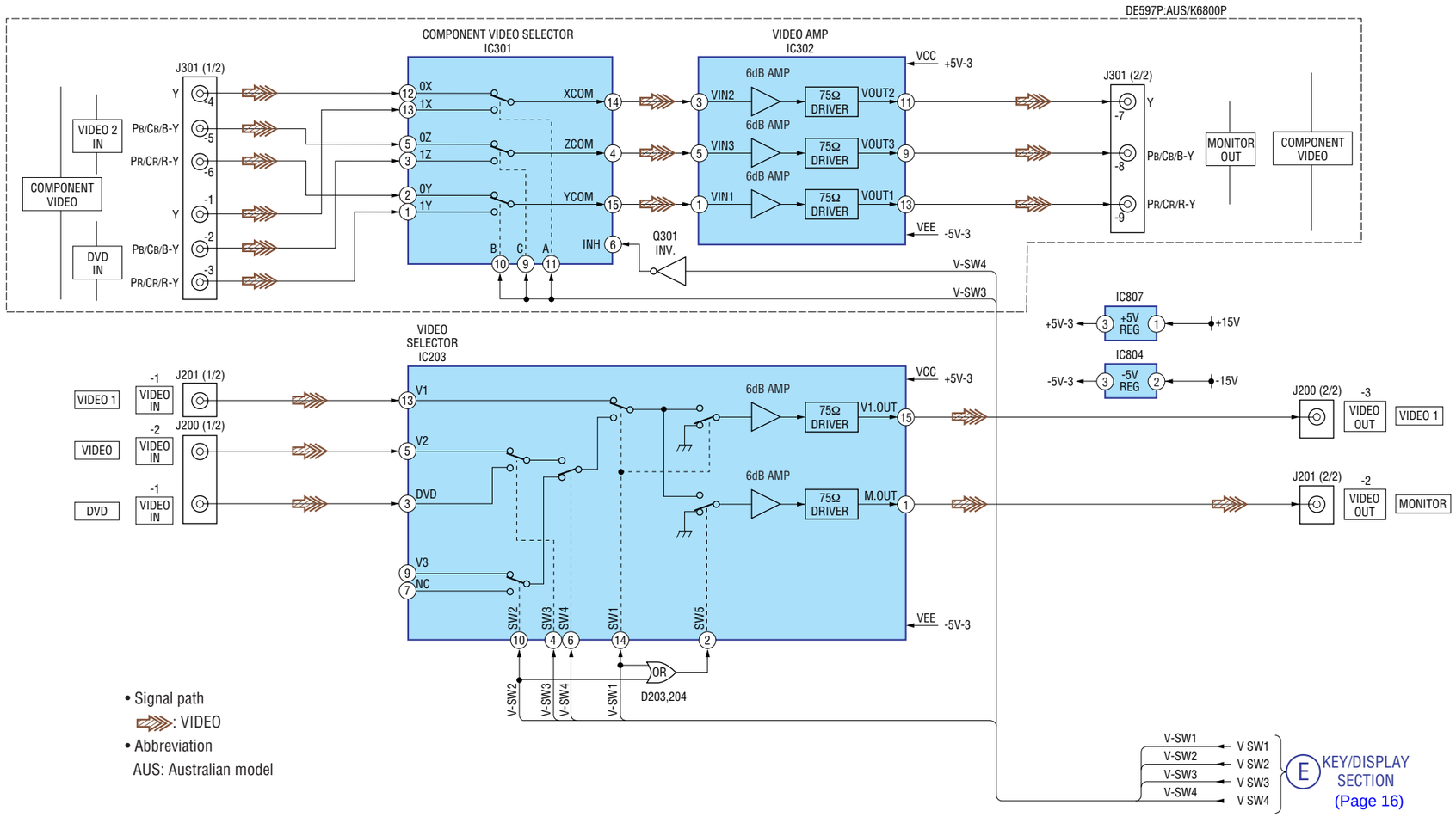

- Signal path
  ⇨: VIDEO
- Abbreviation
  AUS: Australian model

4-5. BLOCK DIAGRAM — KEY/DISPLAY SECTION —

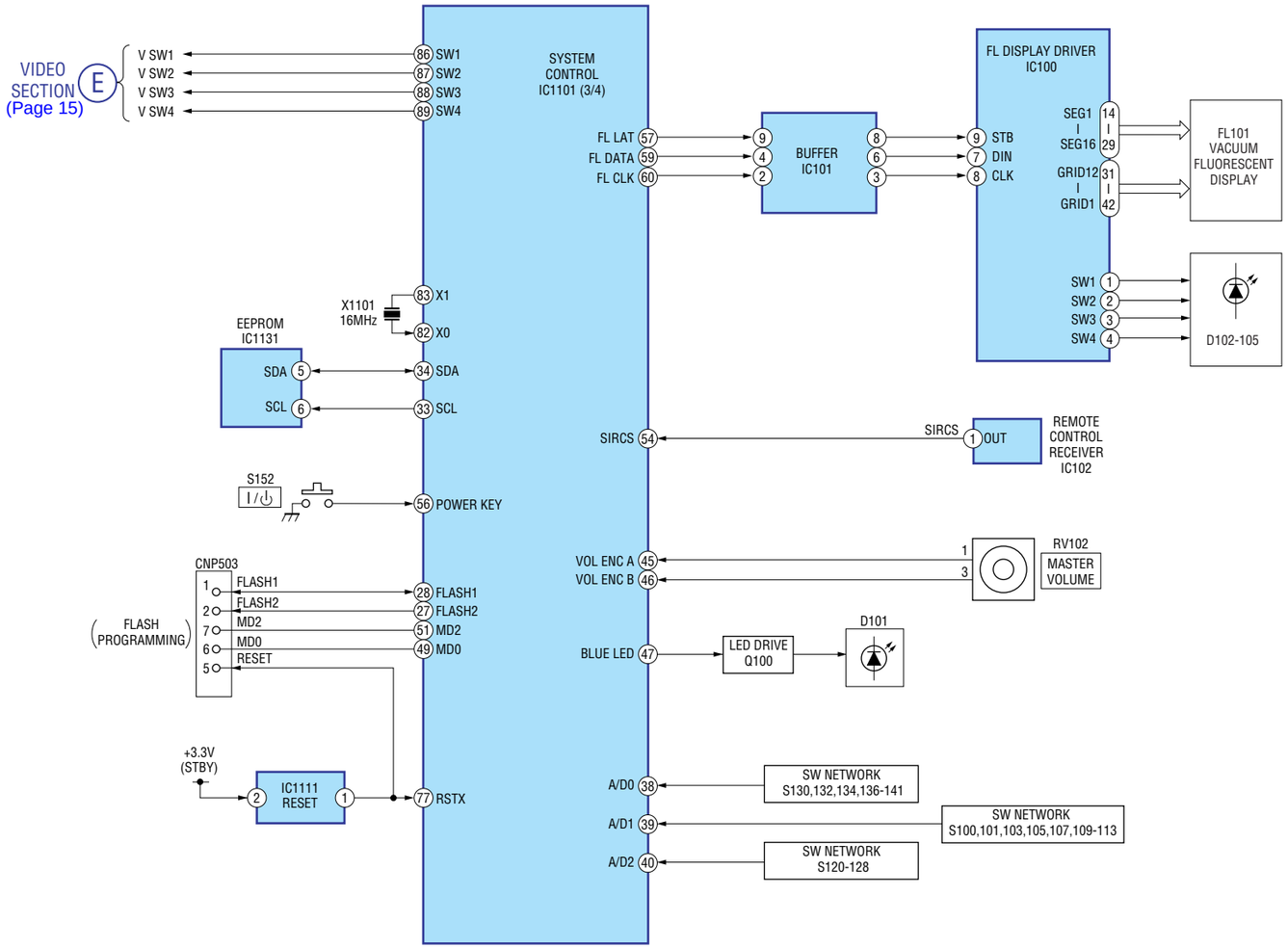

4-6. BLOCK DIAGRAM — POWER SECTION —

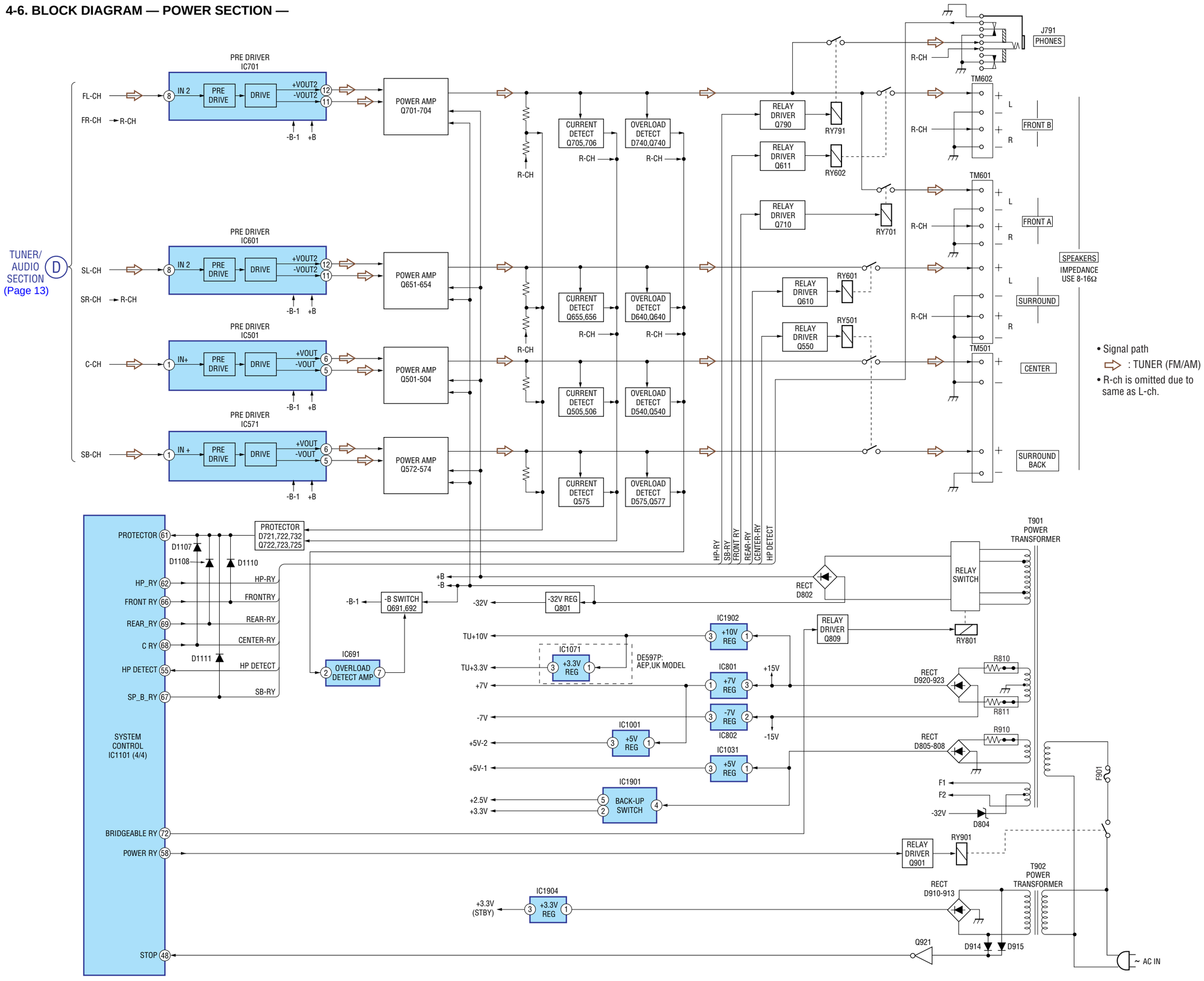

THIS NOTE IS COMMON FOR PRINTED WIRING BOARDS AND SCHEMATIC DIAGRAMS.
(In addition to this, the necessary note is printed in each block.)

for schematic diagram:

- All capacitors are in μF unless otherwise noted. (p: pF) 50 WV or less are not indicated except for electrolytics and tantalums.
- All resistors are in Ω and ¼ W or less unless otherwise specified.
- △ : internal component.
- : nonflammable resistor.
- : fusible resistor.
- : panel designation.

Note: The components identified by mark ⚠ or dotted line with mark ⚠ are critical for safety.
Replace only with part number specified.

- : B+ Line.
- : B– Line.
- Voltage and waveforms are dc with respect to ground under no-signal (detuned) conditions.
  no mark : FM
- Voltages are taken with a VOM (Input impedance 10 MΩ). Voltage variations may be noted due to normal production tolerances.
- Waveforms are taken with a oscilloscope. Voltage variations may be noted due to normal production tolerances.
- Circled numbers refer to waveforms.
- Signal path.
  : TUNER (FM/AM)
  : VIDEO (AUDIO)
  : VIDEO
  : CD (ANALOG)
  : CD (DIGITAL)
- Abbreviation
  AUS : Australian model.

for printed wiring boards:

- : parts extracted from the component side.
- △ : internal component.
- : Pattern from the side which enables seeing.

Caution:
Pattern face side: (Side B) Parts on the pattern face side seen from the pattern face are indicated.
Parts face side: (Side A) Parts on the parts face side seen from the parts face are indicated.

- Abbreviation
  AUS : Australian model.

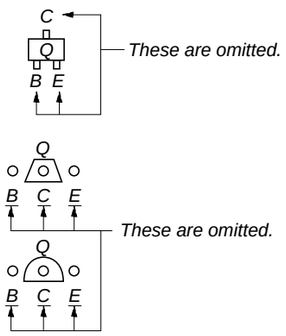

• Waveforms (DIGITAL Board)

① 1V/DIV 50nsec/DIV

12.288MHz
IC1301 ⑬ (CKOUT)

② 1V/DIV 0.2μsec/DIV

3.07MHz
IC1301 ⑭ (BCK)

③ 1V/DIV 50nsec/DIV

12.288MHz
IC1301 ㉑ (XOUT)

④ 1V/DIV 50nsec/DIV

13.5MHz
IC1501 ⑨ (MCLK1)

⑤ 1V/DIV 50nsec/DIV

13.5MHz
IC1501 ⑫ (MCLK2)

⑥ 1V/DIV 50nsec/DIV

12.288MHz
IC1501 ⑭ (SCKOUT)

⑦ 1V/DIV 50nsec/DIV

16MHz
IC1101 ⑧③ (X1)

4-7. PRINTED WIRING BOARDS — MAIN SECTION — • Refer to page 12 for Circuit Boards Location and page 18 for Common Note on Printed Wiring Boards.

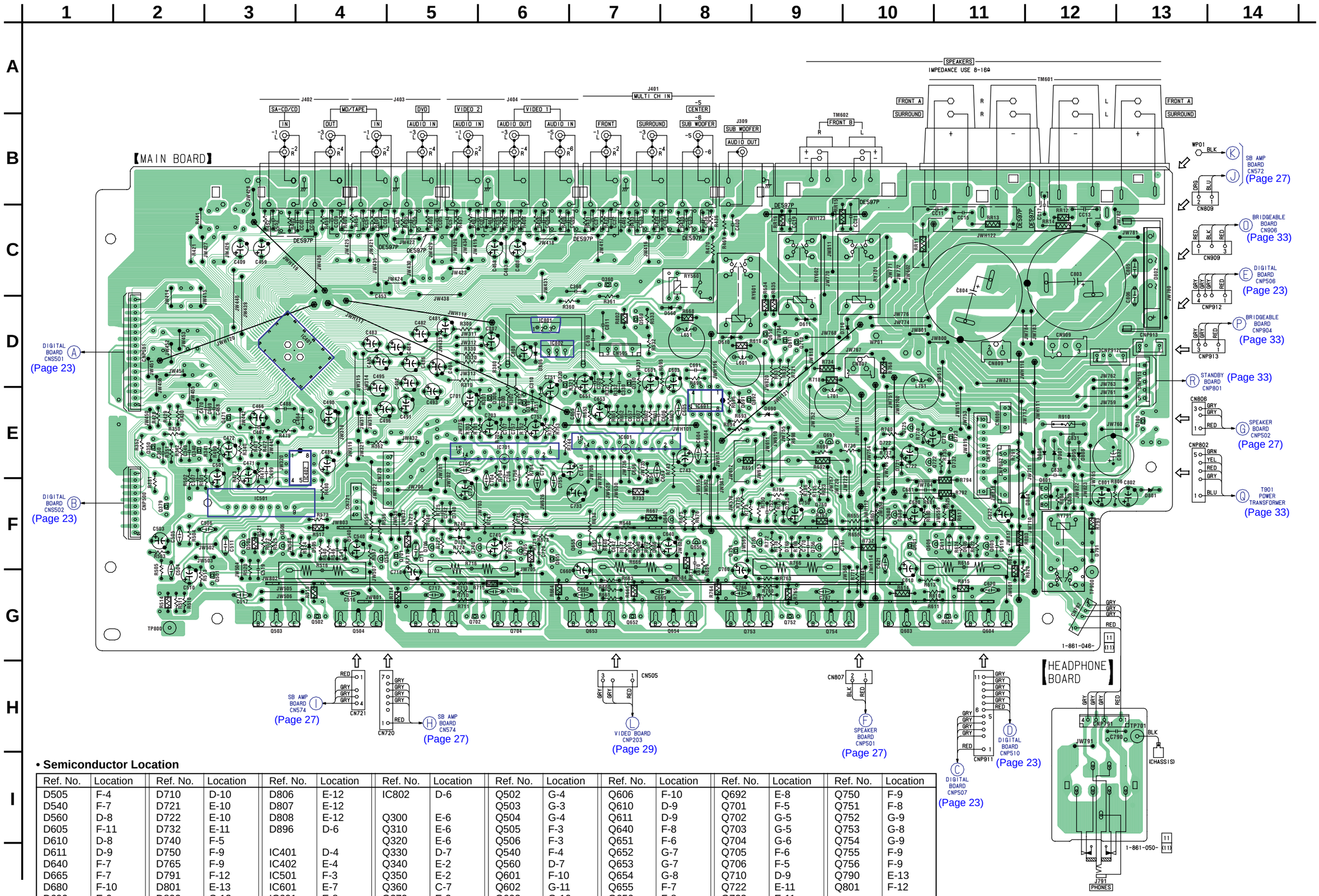

• **Semiconductor Location**

Ref. No.	Location	Ref. No.	Location	Ref. No.	Location	Ref. No.	Location	Ref. No.	Location	Ref. No.	Location	Ref. No.	Location	Ref. No.	Location
D505	F-4	D710	D-10	D806	E-12	IC802	D-6	Q502	G-4	Q606	F-10	Q692	E-8	Q750	F-9
D540	F-7	D721	E-10	D807	E-12			Q503	G-3	Q610	D-9	Q701	F-5	Q751	F-8
D560	D-8	D722	E-10	D808	E-12	Q300	E-6	Q504	G-4	Q611	D-9	Q702	G-5	Q752	G-9
D605	F-11	D732	E-11	D896	D-6	Q310	E-6	Q505	F-3	Q640	F-8	Q703	G-5	Q753	G-8
D610	D-8	D740	F-5			Q320	E-6	Q506	F-3	Q651	F-6	Q704	G-6	Q754	G-9
D611	D-9	D750	F-9	IC401	D-4	Q330	D-7	Q540	F-4	Q652	G-7	Q705	F-6	Q755	F-9
D640	F-7	D765	F-9	IC402	E-4	Q340	E-2	Q560	D-7	Q653	G-7	Q706	F-5	Q756	F-9
D665	F-7	D791	F-12	IC501	F-3	Q350	E-2	Q601	F-10	Q654	G-8	Q710	D-9	Q790	E-13
D680	F-10	D801	E-13	IC601	E-7	Q360	C-7	Q602	G-11	Q655	F-7	Q722	E-11	Q801	F-12
D690	E-9	D802	C-13	IC691	E-8	Q379	E-2	Q603	G-10	Q656	F-8	Q723	E-11		
D691	E-8	D804	F-12	IC701	E-6	Q471	E-3	Q604	G-11	Q680	F-10	Q725	E-10		
D705	F-5	D805	E-12	IC801	D-6	Q501	G-3	Q605	F-11	Q691	E-9	Q740	F-6		

4-8. SCHEMATIC DIAGRAM — MAIN SECTION (1/2) — • Refer to page 18 for Common Note on Schematic Diagram.

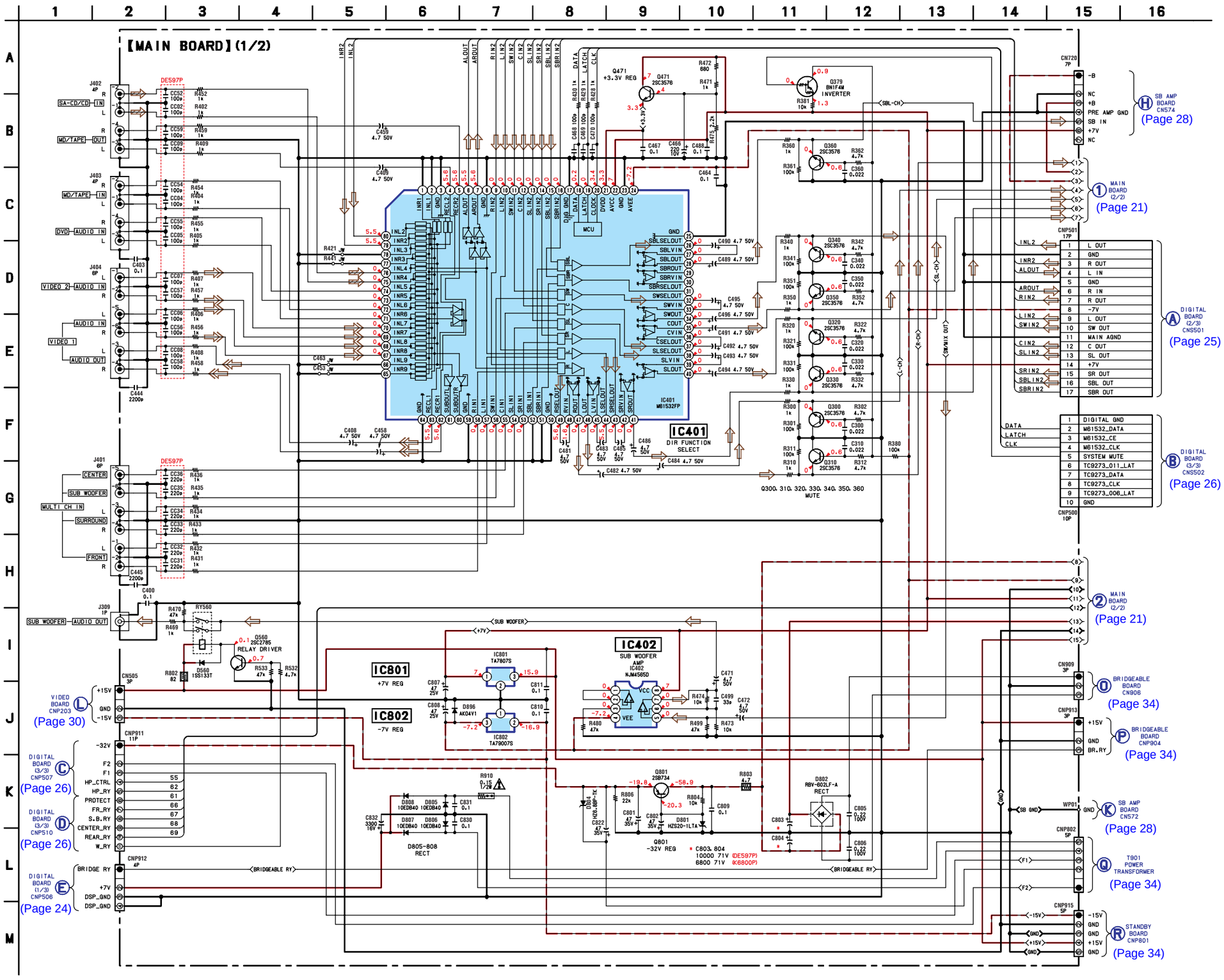

The components identified by mark ⚠ or dotted line with mark ⚠ are critical for safety. Replace only with part number specified.

4-9. SCHEMATIC DIAGRAM — MAIN SECTION (2/2) — • Refer to page 18 for Common Note on Schematic Diagram and page 35 for IC Block Diagrams.

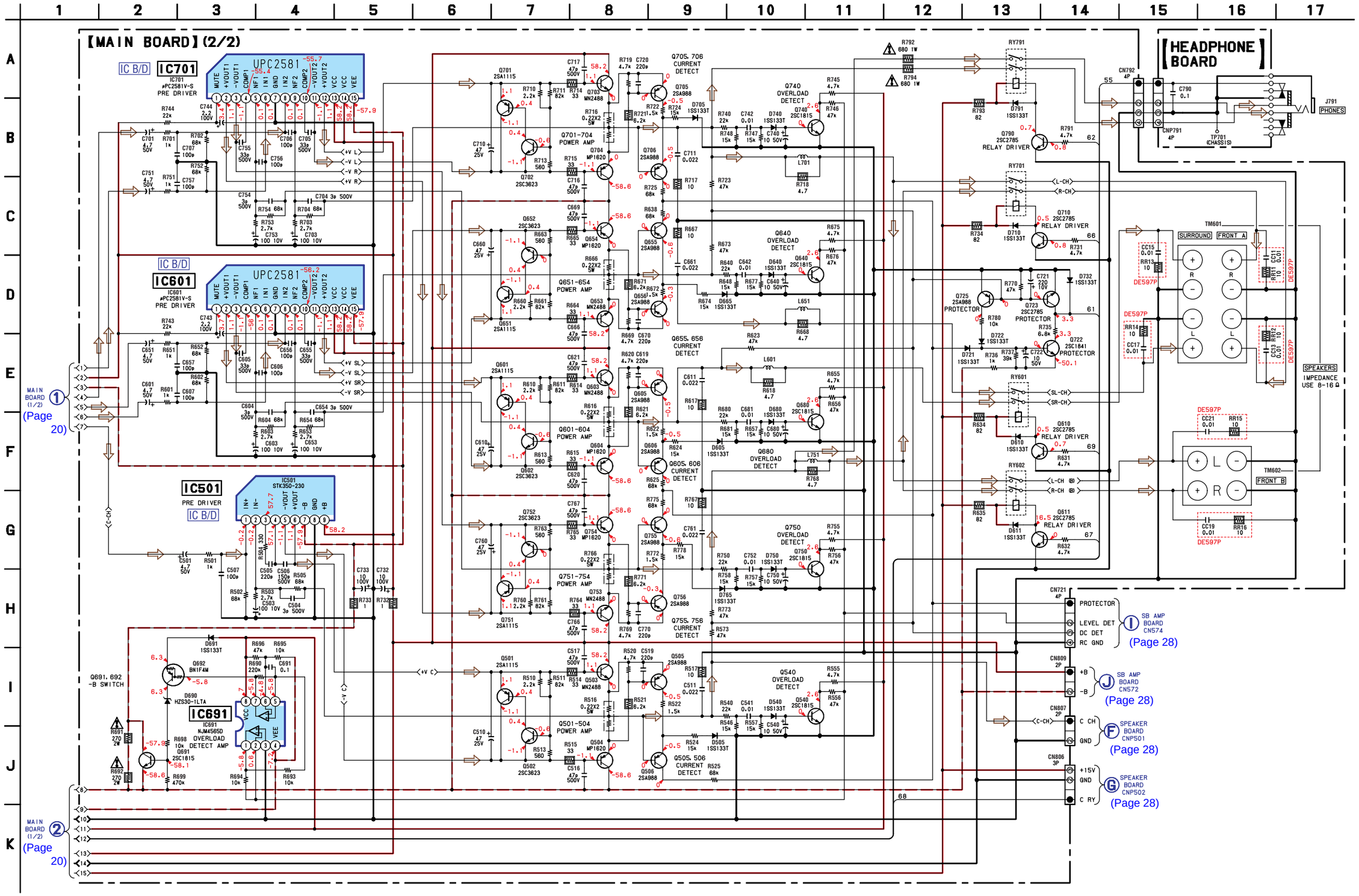

The components identified by mark ⚠ or dotted line with mark ⚠ are critical for safety. Replace only with part number specified.

4-10. PRINTED WIRING BOARD — DIGITAL SECTION (1/2) —

• Refer to page 12 for Circuit Boards Location and page 18 for Common Note on Printed Wiring Boards.

【DIGITAL BOARD】(SIDE A)

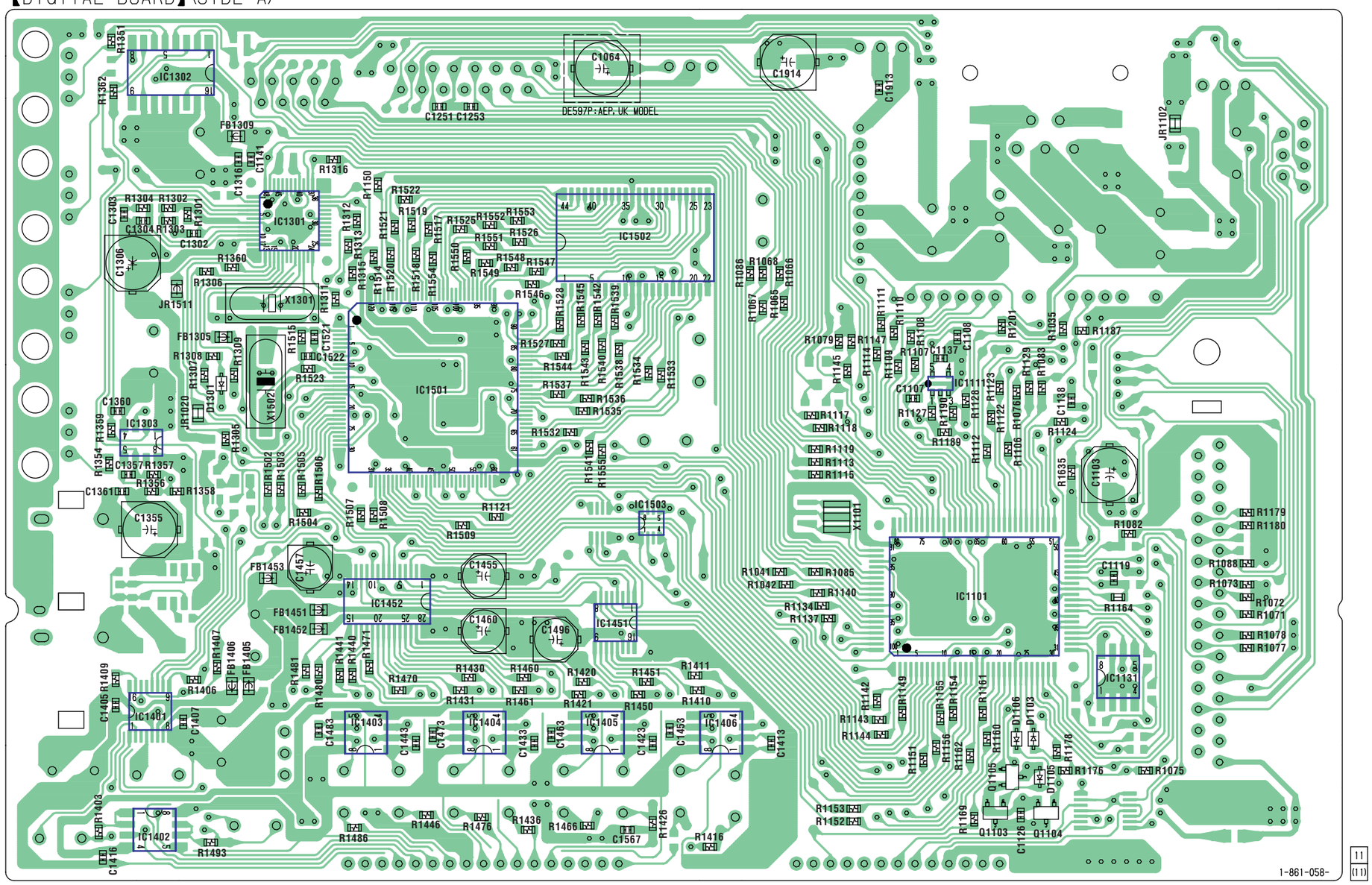

• **Semiconductor Location (Side A)**

Ref. No.	Location
D1103	H-4
D1105	I-4
D1106	H-4
D1301	F-11
IC1101	G-5
IC1111	F-5
IC1131	H-3
IC1301	D-10
IC1302	C-11
IC1303	F-11
IC1401	H-11
IC1402	I-11
IC1403	I-10
IC1404	I-9
IC1405	I-8
IC1406	I-7
IC1451	H-8
IC1452	G-9
IC1501	F-9
IC1502	D-7
IC1503	G-7
Q1103	I-4
Q1104	I-4
Q1105	I-4

4-11. PRINTED WIRING BOARD — DIGITAL SECTION (2/2) —

• Refer to page 12 for Circuit Boards Location and page 18 for Common Note on Printed Wiring Boards.

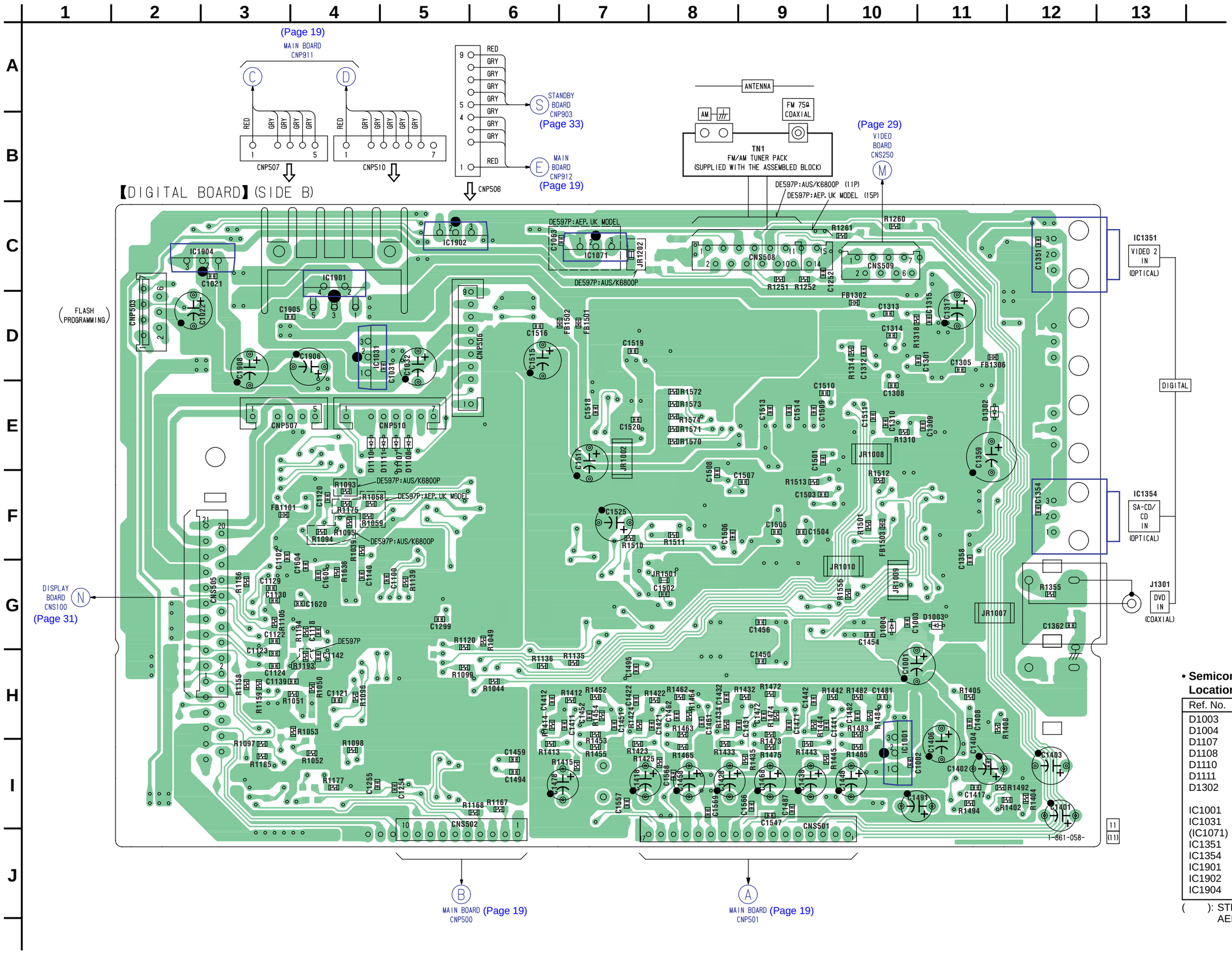

• **Semiconductor Location (Side B)**

Ref. No.	Location
D1003	G-11
D1004	G-10
D1107	E-5
D1108	E-5
D1110	E-4
D1111	E-5
D1302	E-11
IC1001	I-10
IC1031	D-4
(IC1071)	C-7
IC1351	C-12
IC1354	F-12
IC1901	C-4
IC1902	C-5
IC1904	C-3

( ): STR-DE597P: AEP, UK model only

4-12. SCHEMATIC DIAGRAM — DIGITAL SECTION (1/3) — • Refer to page 18 for Common Note on Schematic Diagram and Waveforms and page 35 for IC Block Diagrams.

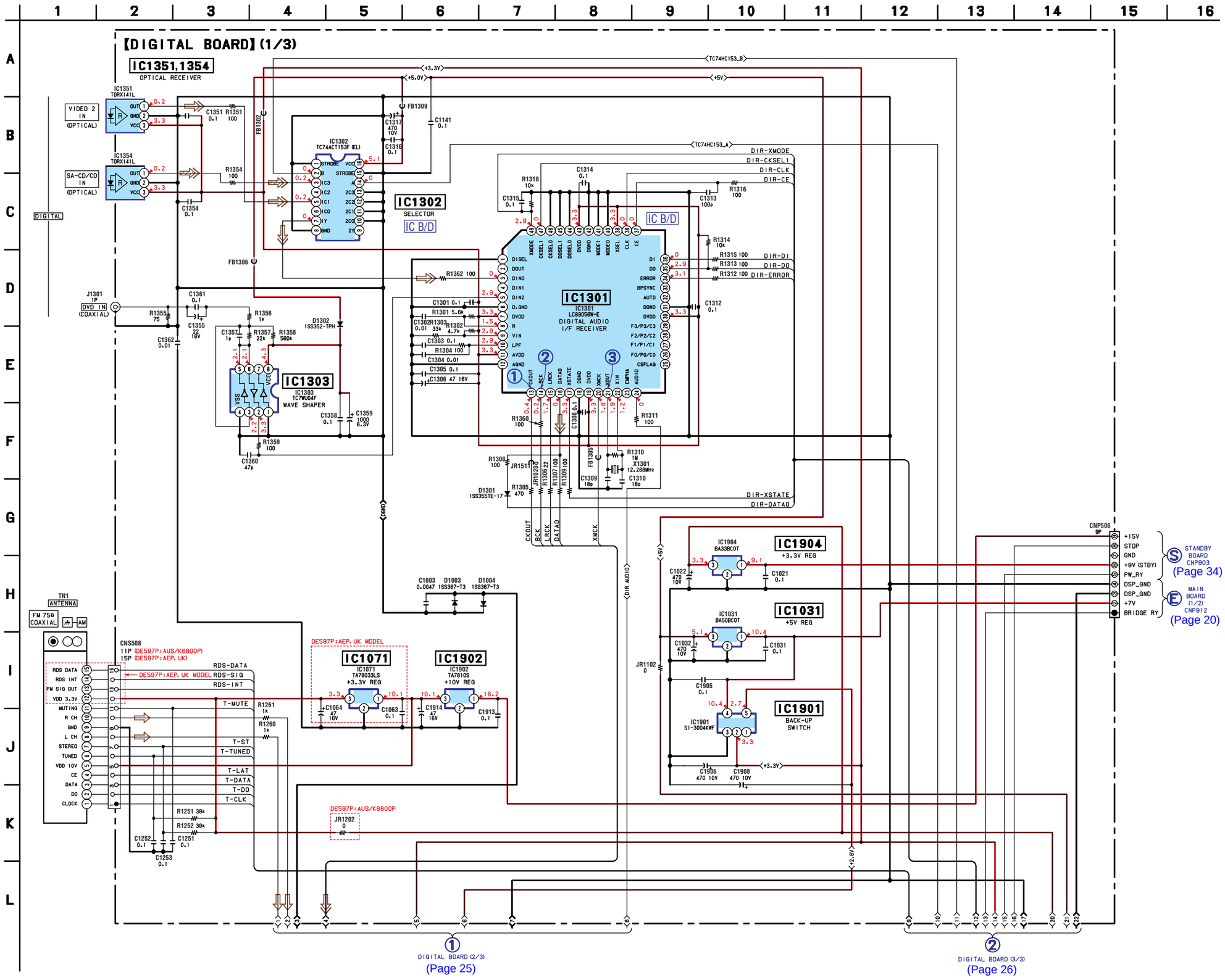

4-13. SCHEMATIC DIAGRAM — DIGITAL SECTION (2/3) — • Refer to page 18 for Common Note on Schematic Diagram and Waveforms and page 36 for IC Block Diagrams and page 38 for IC Pin Descriptions.

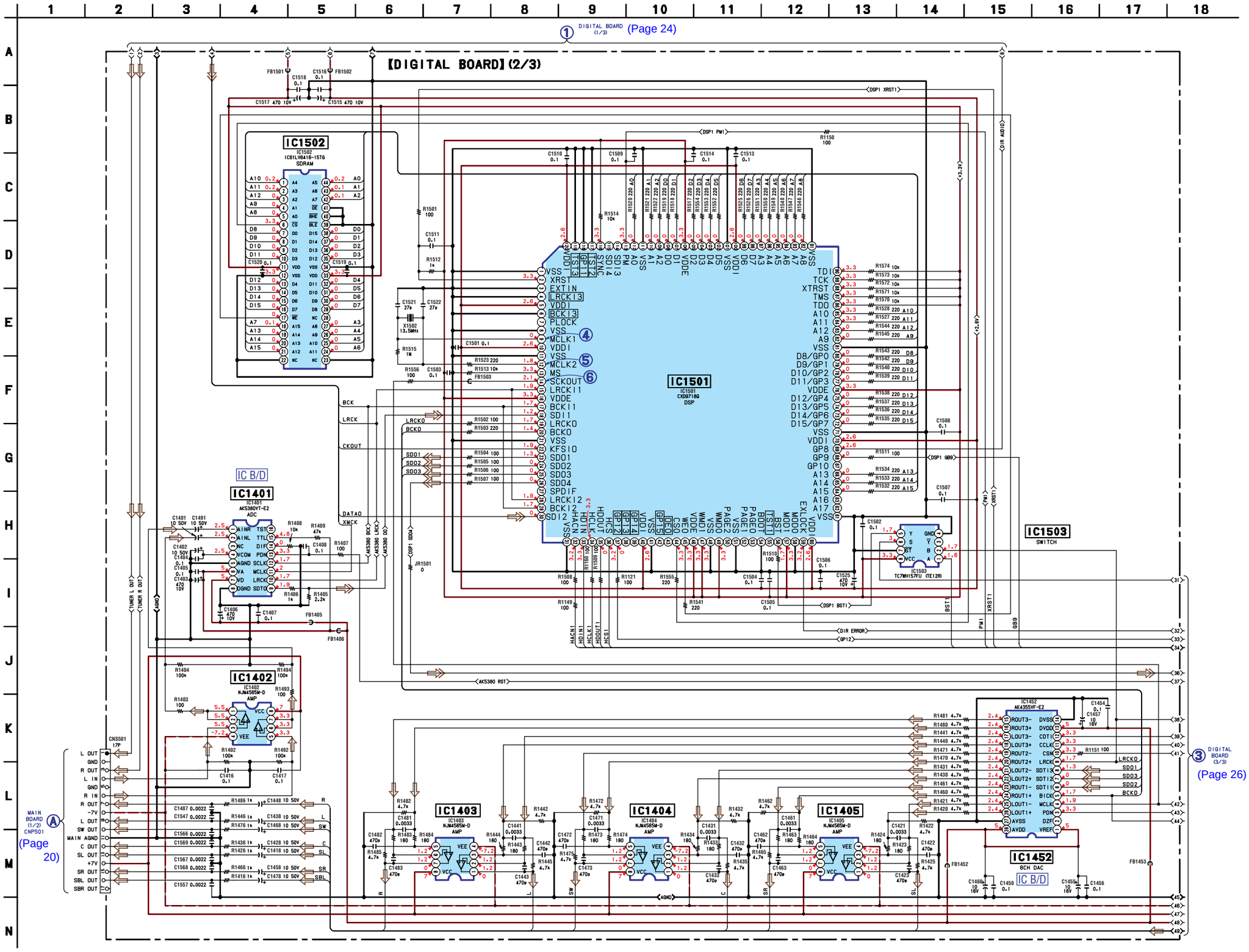

4-14. SCHEMATIC DIAGRAM — DIGITAL SECTION (3/3) — • Refer to page 18 for Common Note on Schematic Diagram and Waveforms and page 36 for IC Block Diagrams and page 40 for IC Pin Descriptions.

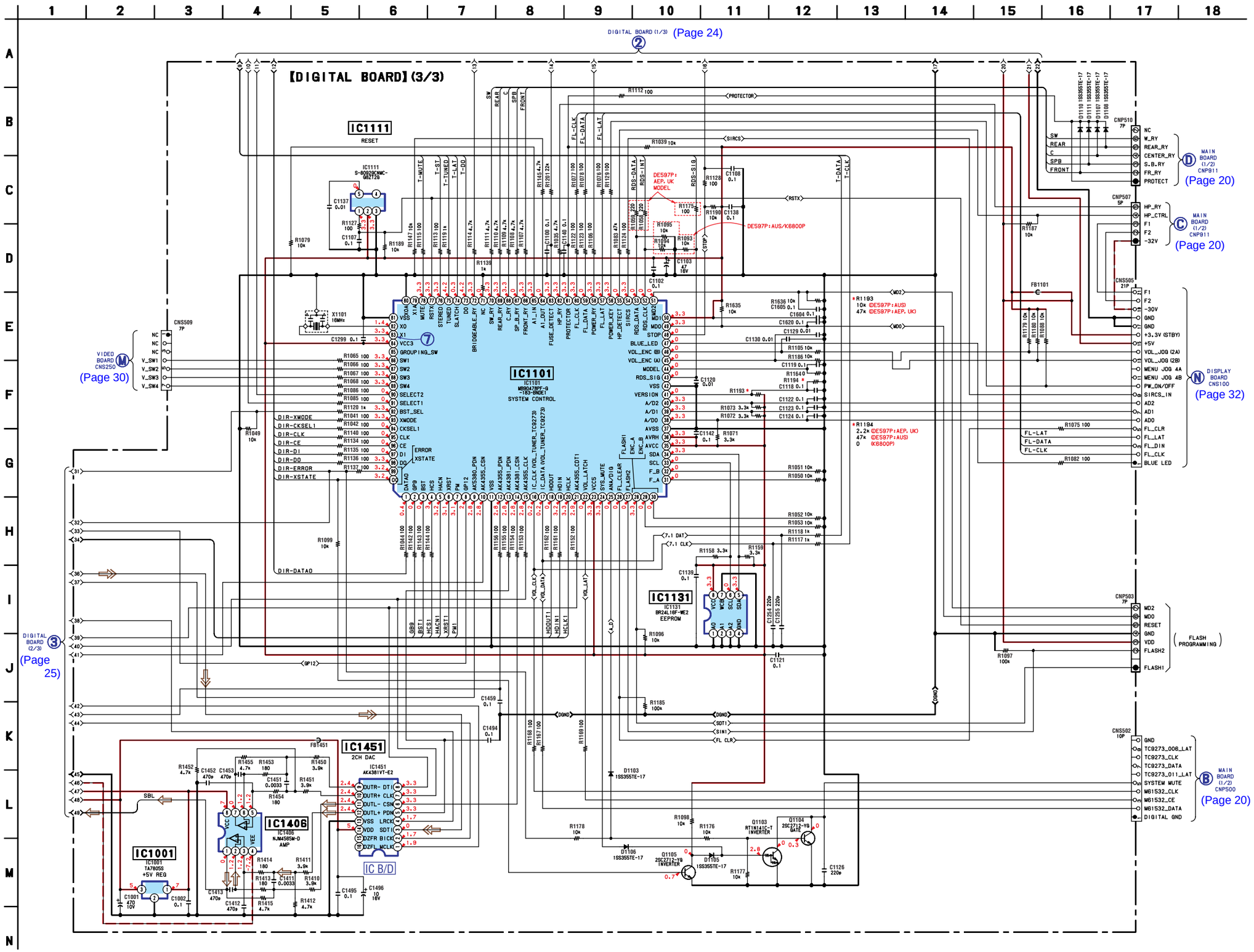

4-15. PRINTED WIRING BOARDS — CENTER/SURROUND BACK SPEAKER SECTION — • Refer to page 12 for Circuit Boards Location and page 18 for Common Note on Printed Wiring Boards.

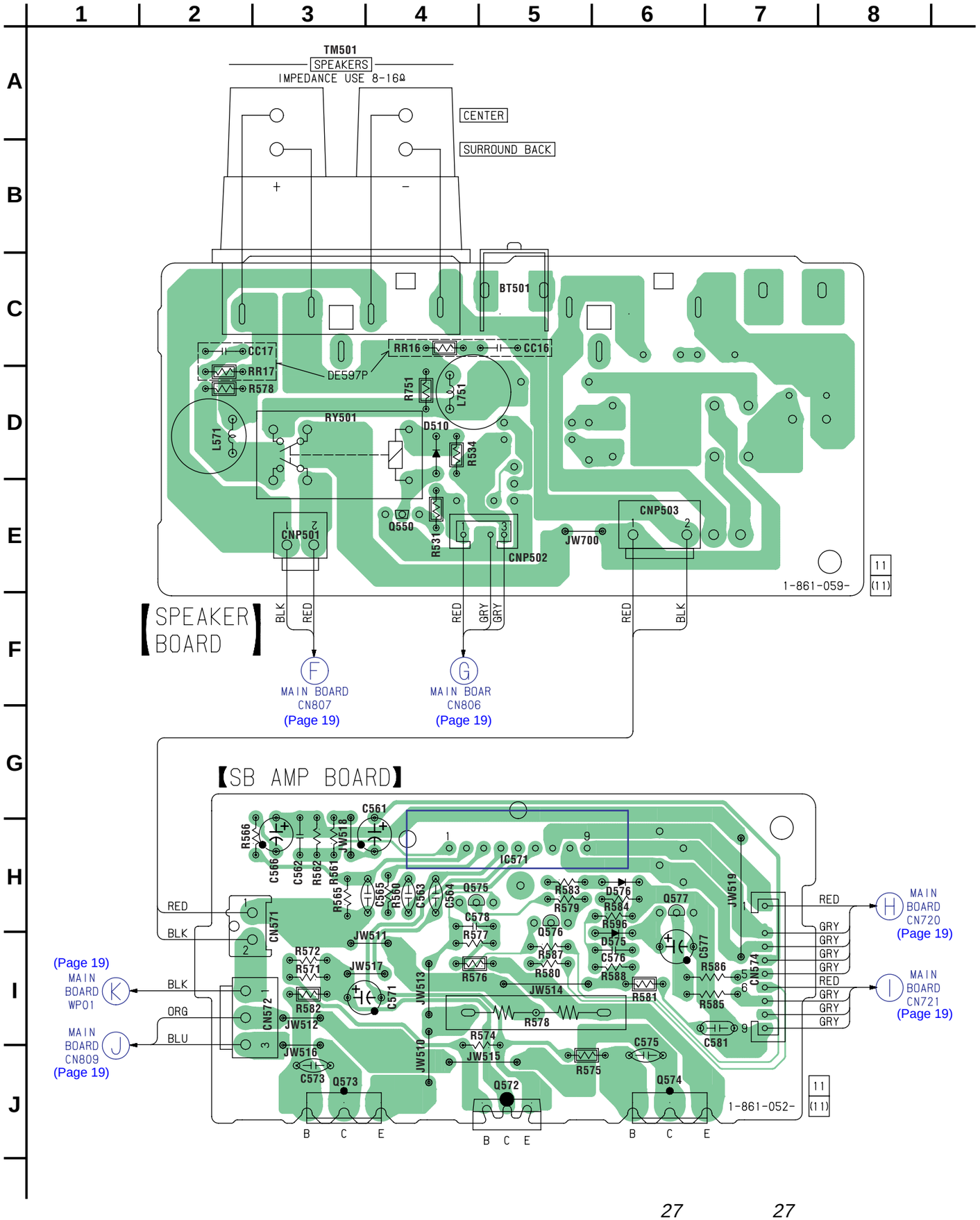

• **Semiconductor Location**

Ref. No.	Location
D510	D-4
D575	H-6
D576	H-6
IC571	H-5
Q550	E-4
Q572	J-5
Q573	J-3
Q574	J-6
Q575	H-5
Q576	H-5
Q577	H-6

4-16. SCHEMATIC DIAGRAM — CENTER/SURROUND BACK SPEAKER SECTION — • Refer to page 18 for Common Note on Schematic Diagram and page 35 for IC Block Diagrams.

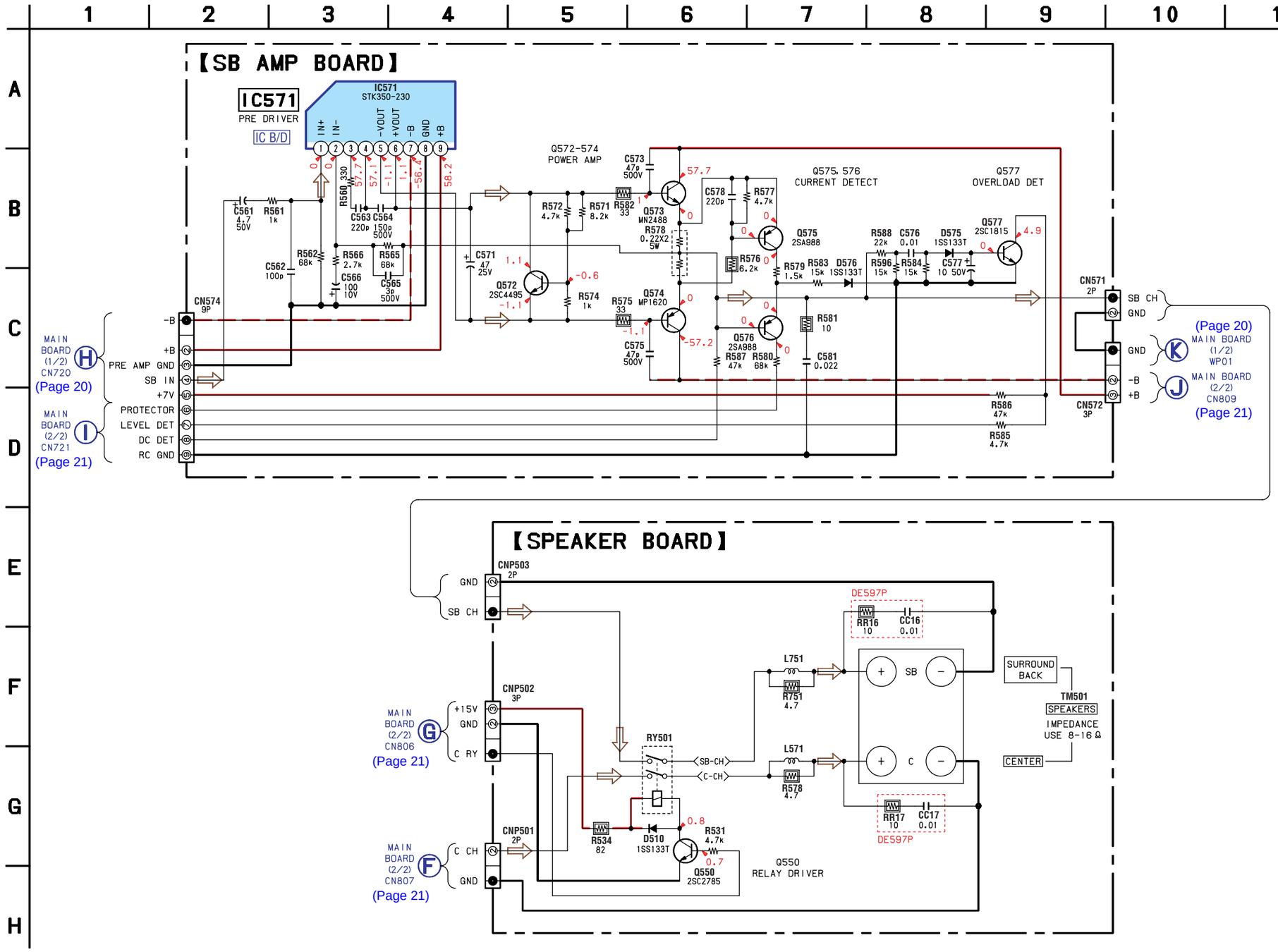

4-17. PRINTED WIRING BOARD — VIDEO SECTION — • Refer to page 12 for Circuit Boards Location and page 18 for Common Note on Printed Wiring Boards.

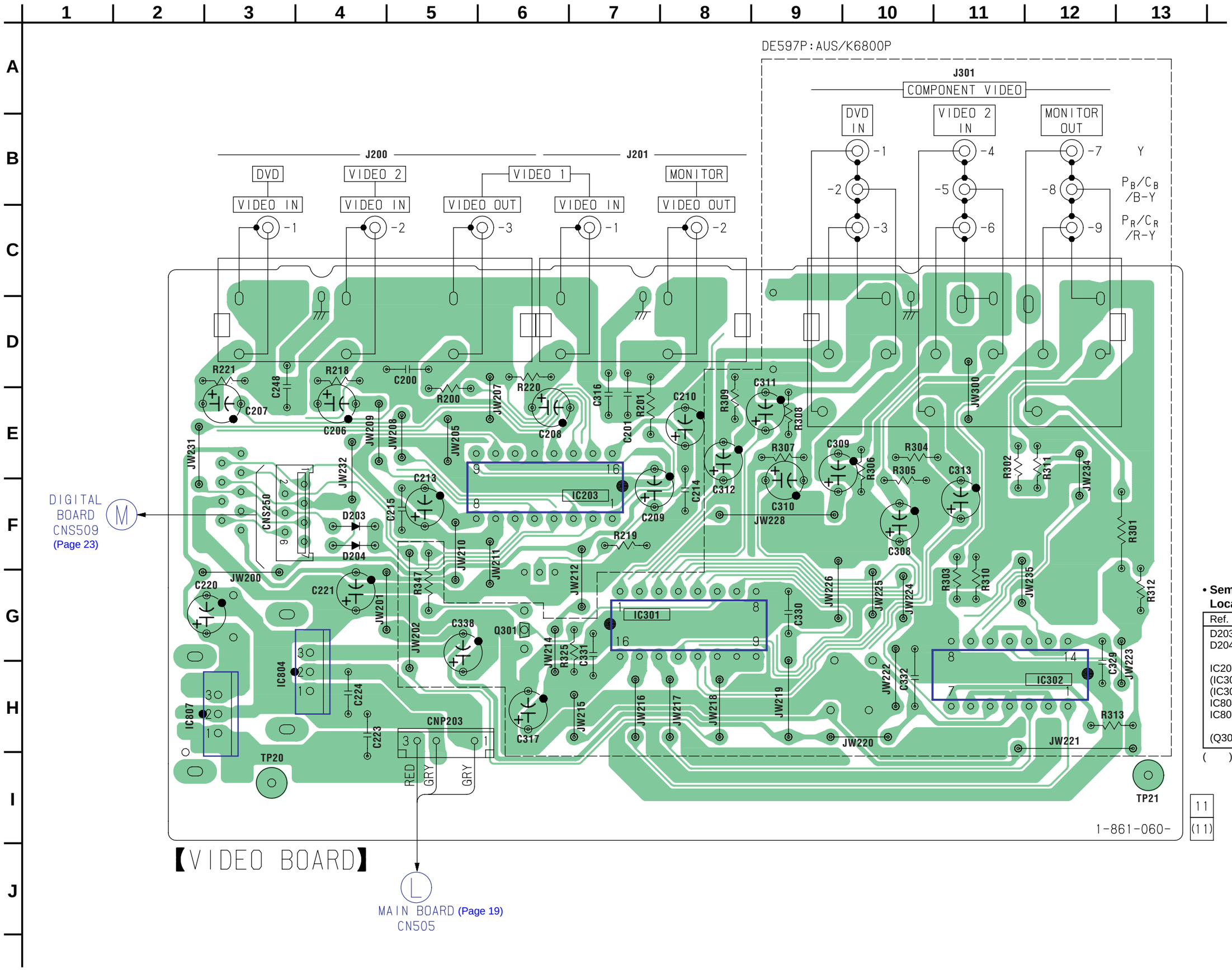

• **Semiconductor Location**

Ref. No.	Location
D203	F-4
D204	F-4
IC203	F-7
(IC301)	G-7
(IC302)	H-12
IC804	H-4
IC807	H-2
(Q301)	G-6

( ): STR-DE597P: AUS/K6800P only

4-18. SCHEMATIC DIAGRAM — VIDEO SECTION — • Refer to page 18 for Common Note on Schematic Diagram and page 37 for IC Block Diagrams.

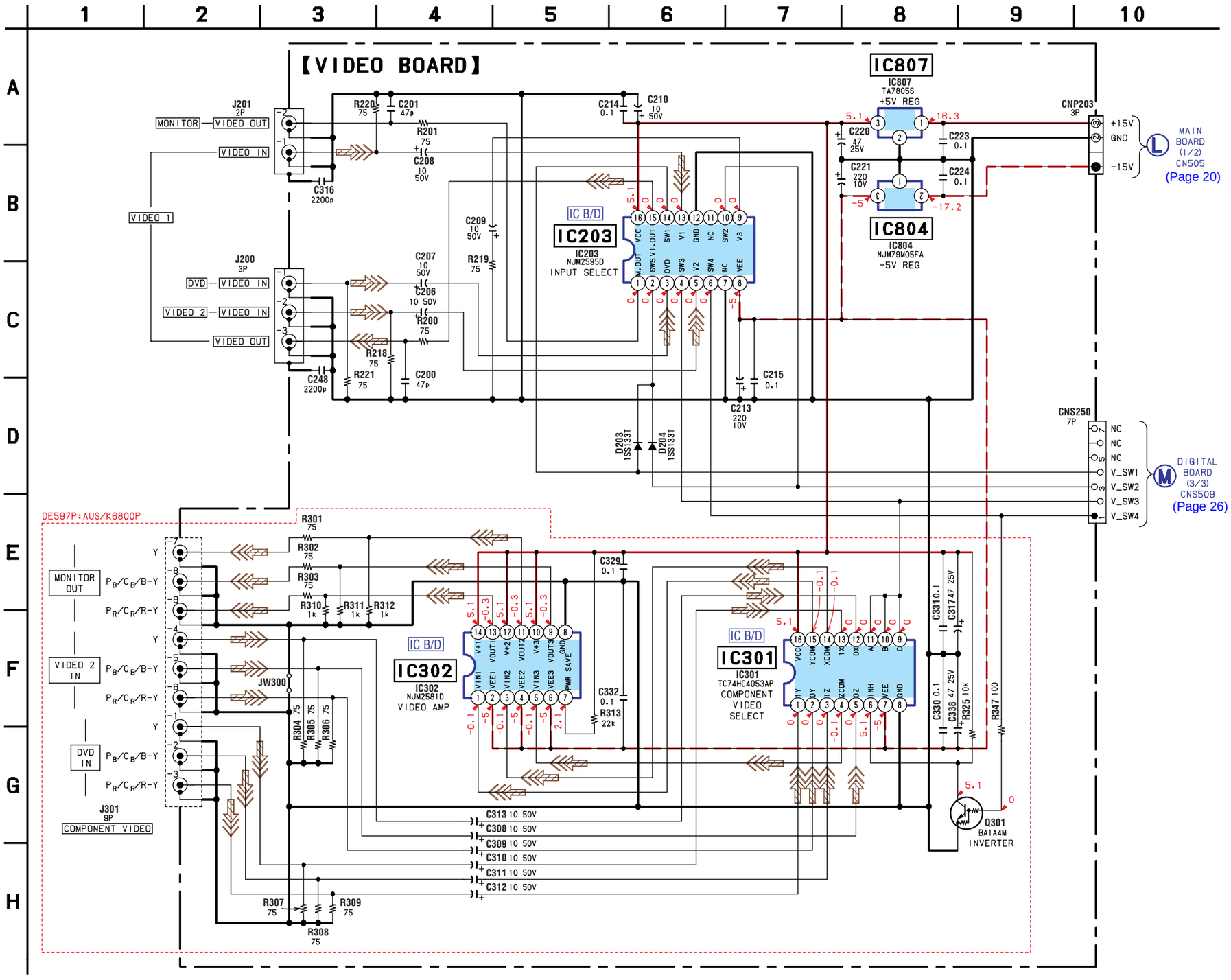

4-19. PRINTED WIRING BOARDS — DISPLAY SECTION — • Refer to page 12 for Circuit Boards Location and page 18 for Common Note on Printed Wiring Boards.

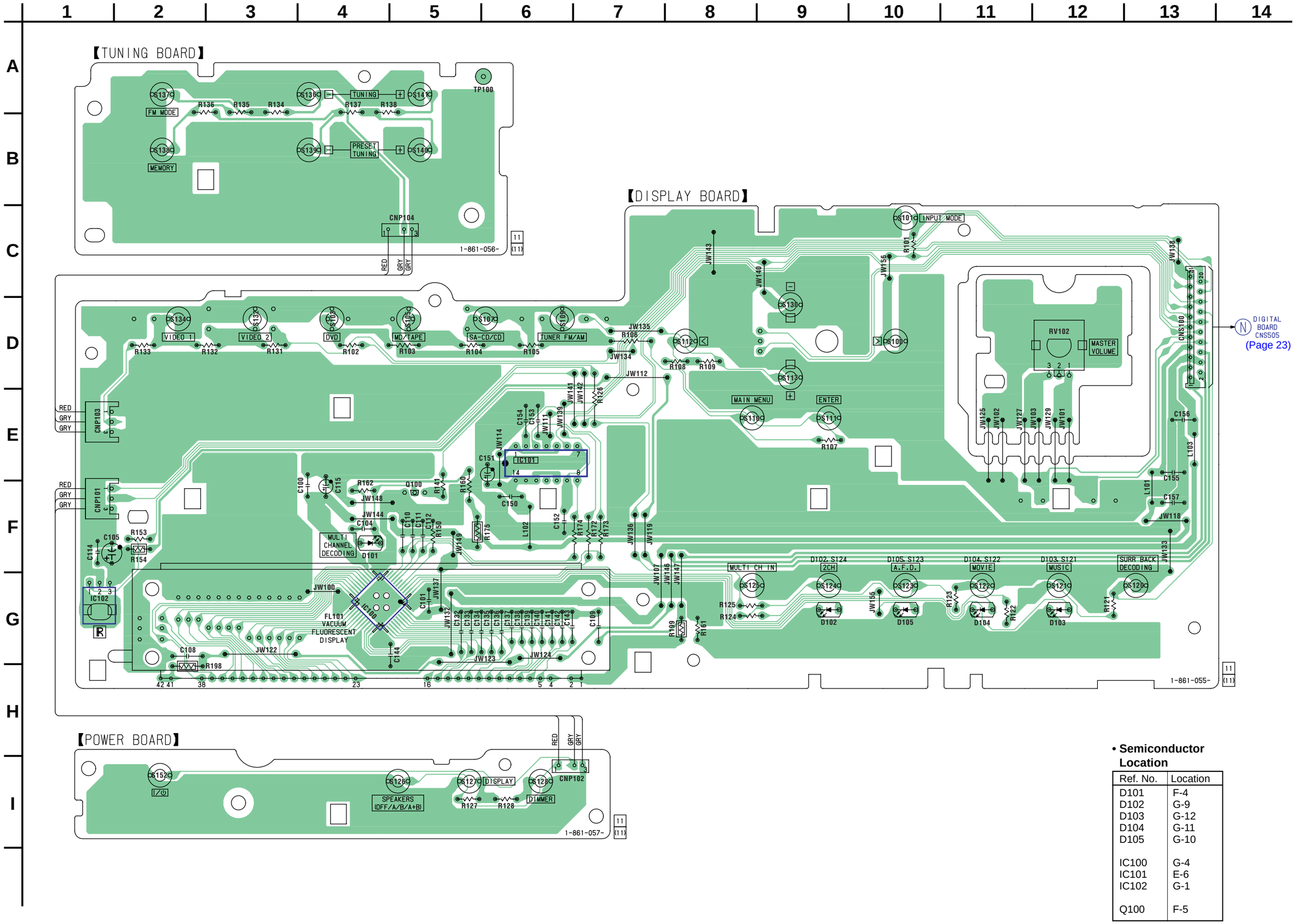

• **Semiconductor Location**

Ref. No.	Location
D101	F-4
D102	G-9
D103	G-12
D104	G-11
D105	G-10
IC100	G-4
IC101	E-6
IC102	G-1
Q100	F-5

4-20. SCHEMATIC DIAGRAM — DISPLAY SECTION — • Refer to page 18 for Common Note on Schematic Diagram.

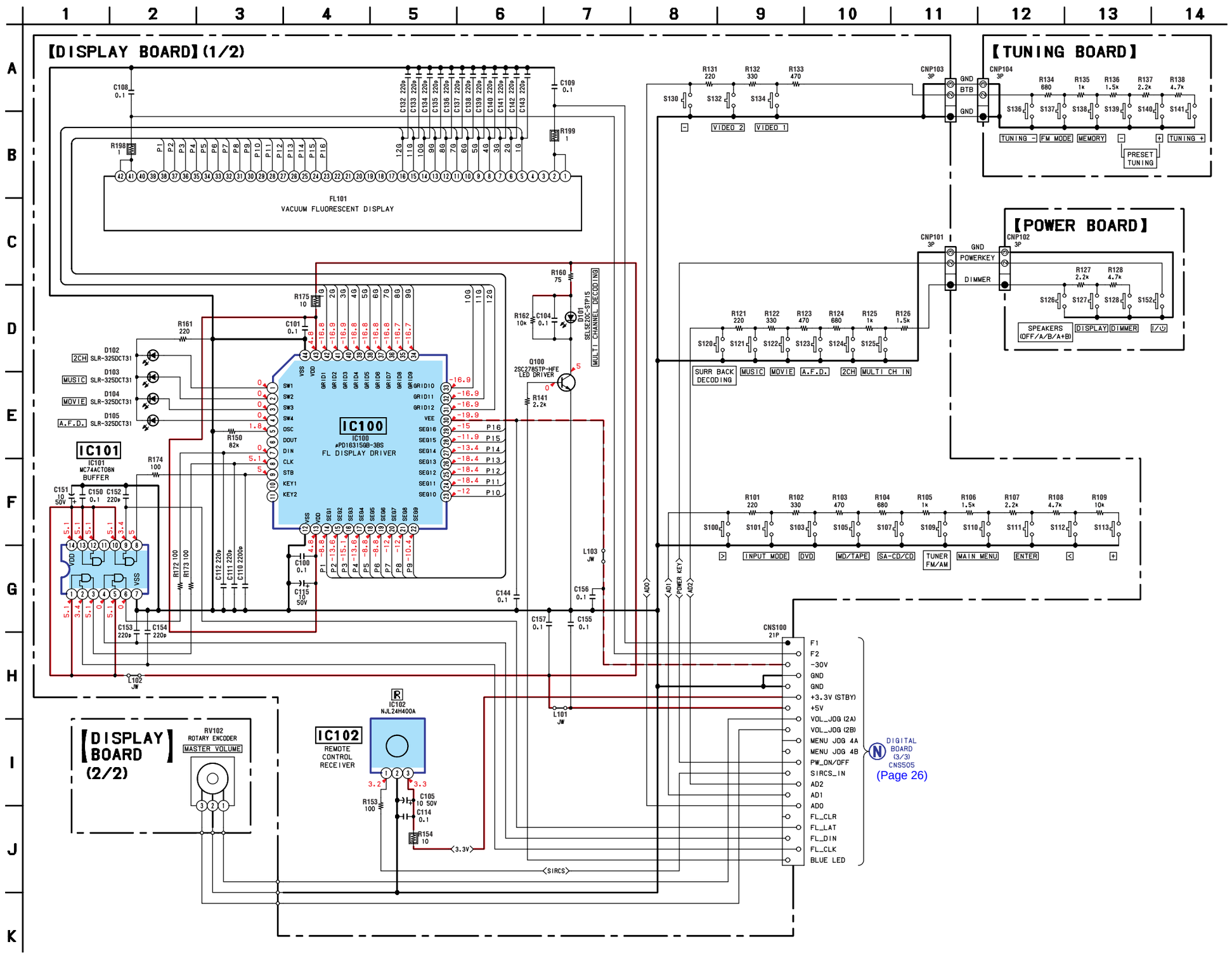

4-21. PRINTED WIRING BOARDS — POWER SECTION — • Refer to page 12 for Circuit Boards Location and page 18 for Common Note on Printed Wiring Boards.

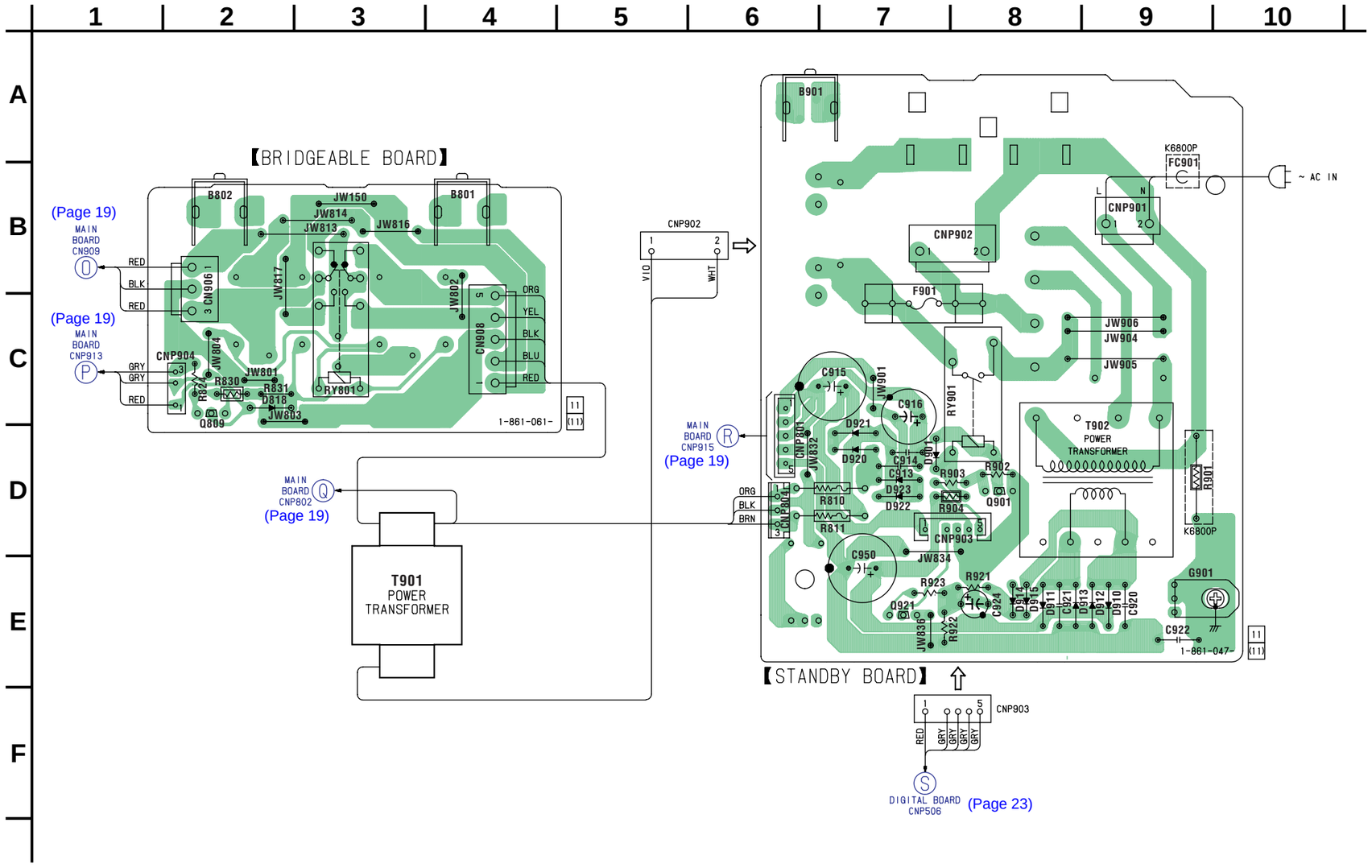

• **Semiconductor Location**

Ref. No.	Location
D818	C-2
D901	D-7
D910	E-9
D911	E-8
D912	E-9
D913	E-8
D914	E-8
D915	E-8
D920	D-7
D921	C-7
D922	D-7
D923	D-7
Q809	C-2
Q901	D-8
Q921	E-7

4-22. SCHEMATIC DIAGRAM — POWER SECTION — • Refer to page 18 for Common Note on Schematic Diagram.

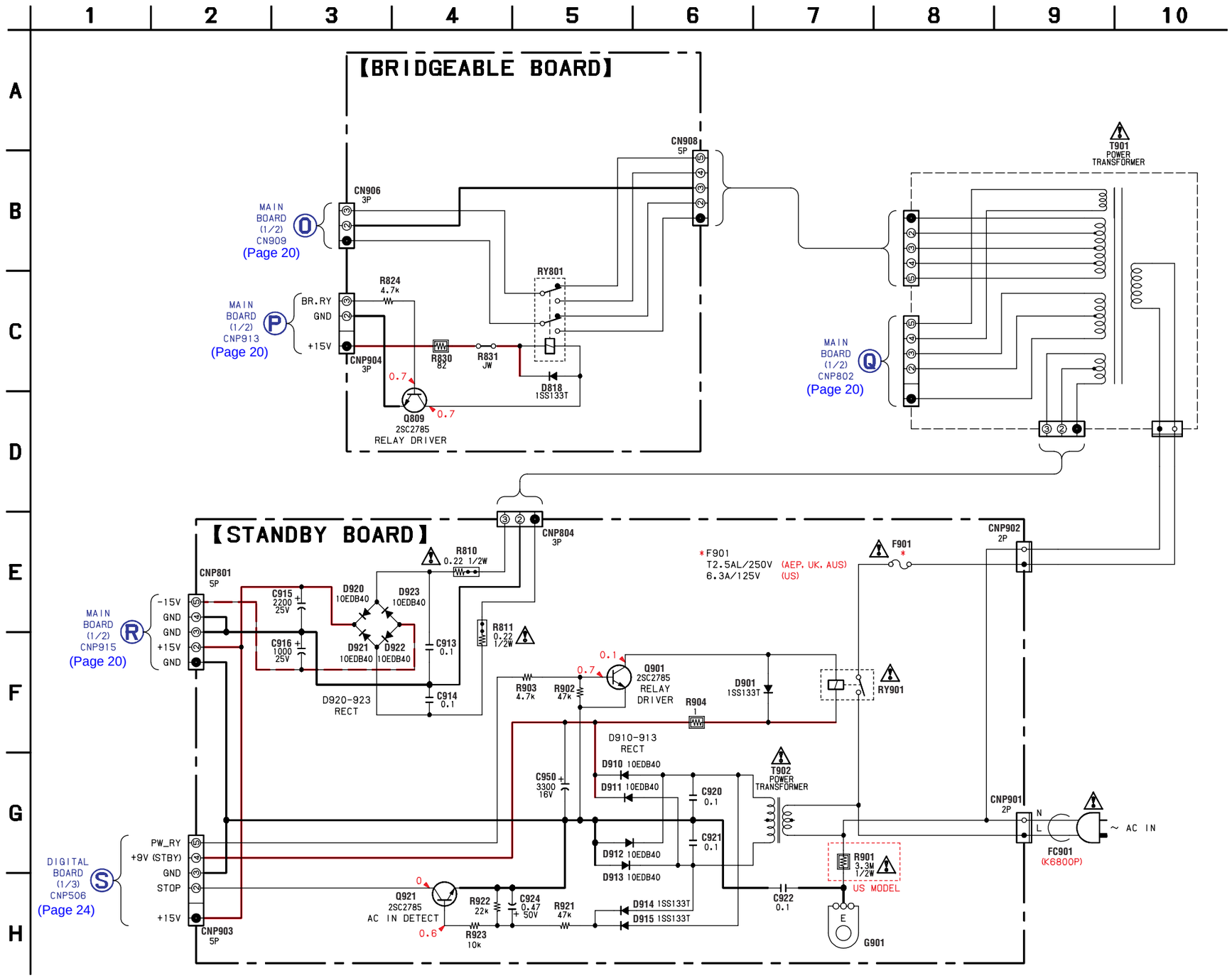

The components identified by mark ⚠ or dotted line with mark ⚠ are critical for safety. Replace only with part number specified.

4-23. IC BLOCK DIAGRAMS

IC601 μPC2581V-S (MAIN BOARD (2/2))
IC701 μPC2581V-S (MAIN BOARD (2/2))

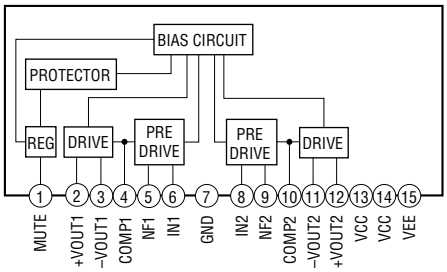

IC501 STK350-230 (MAIN BOARD (2/2))
IC571 STK350-230 (SB AMP BOARD)

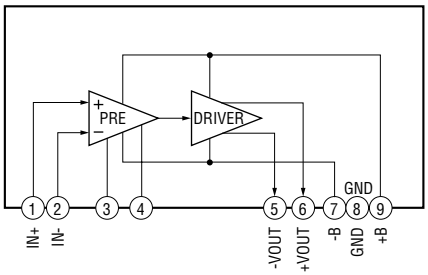

IC1301 LC89056W-E (DIGITAL BOARD (1/3))

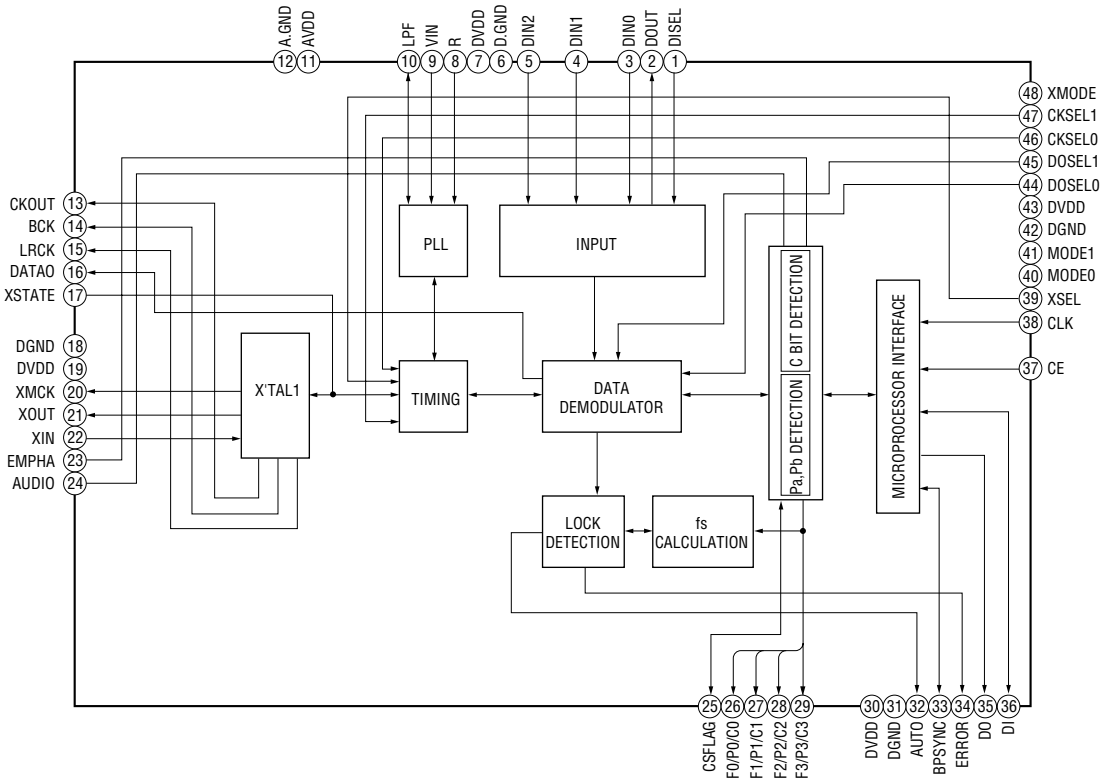

IC1302 TC74ACT153F(EL) (DIGITAL BOARD (1/3))

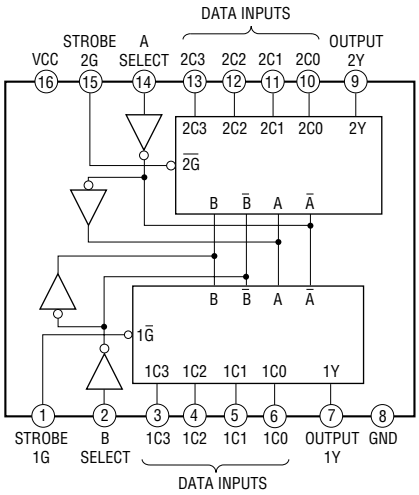

IC1401 AK5380VT-E2 (DIGITAL BOARD (2/3))

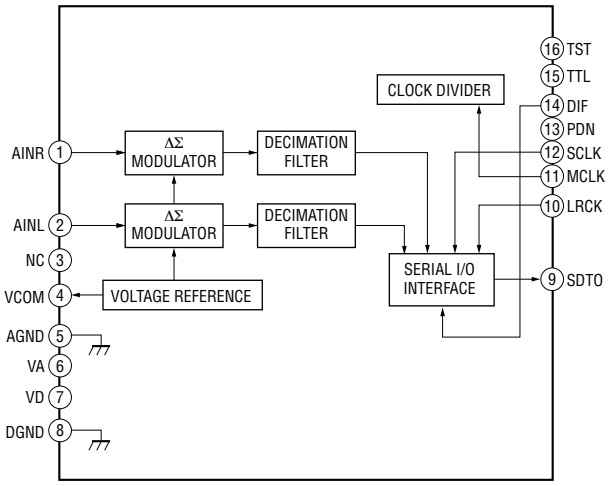

IC1452 AK4355VF-E2 (DIGITAL BOARD (2/3))

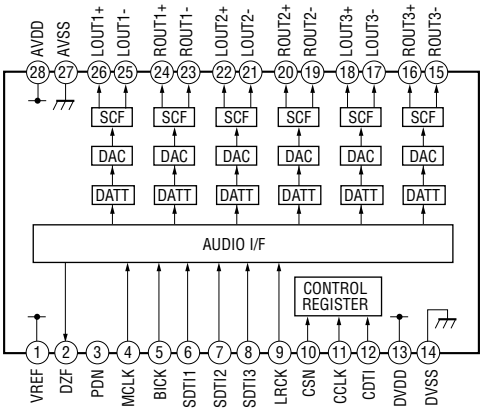

IC1451 AK4381VT-E2 (DIGITAL BOARD (3/3))

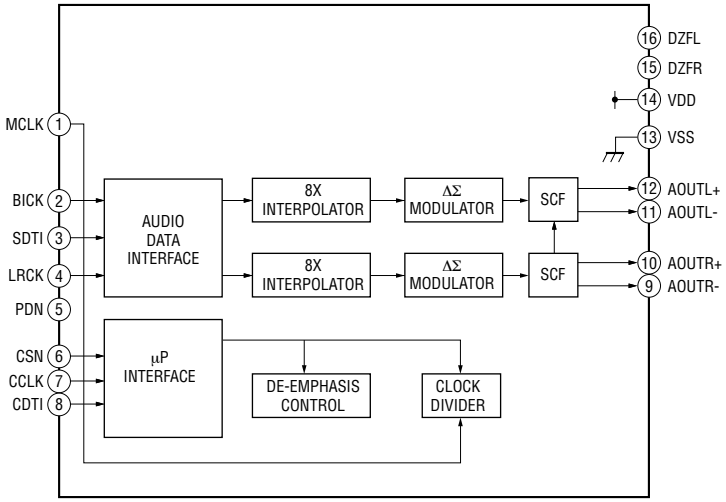

IC203 NJM2595D (VIDEO BOARD)

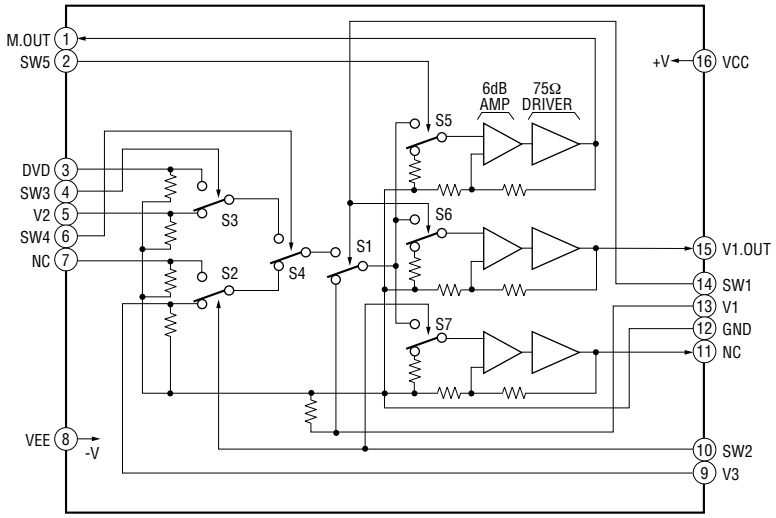

IC302 NJM2581D (VIDEO BOARD)

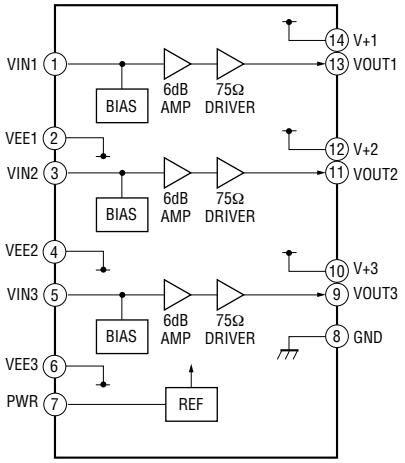

IC301 TC74HC4053AP (VIDEO BOARD)

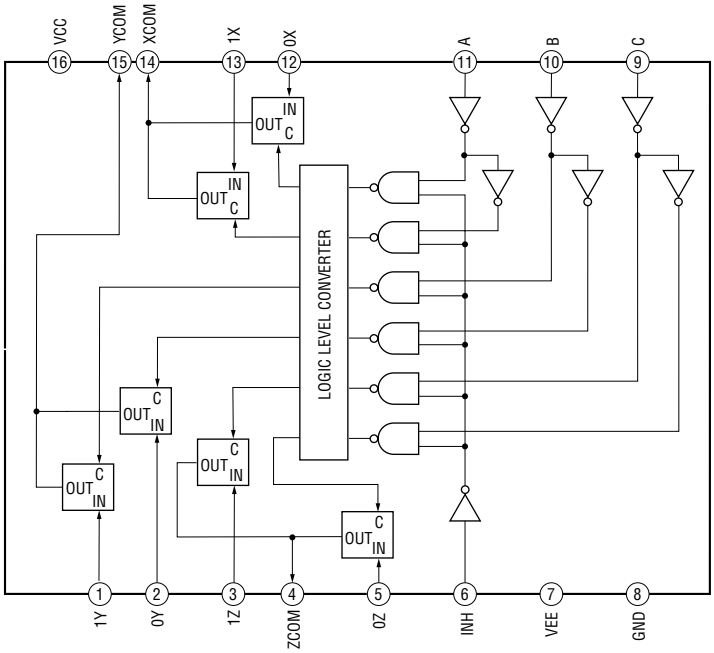

• IC Pin Descriptions

IC1501 CXD9718Q (DSP) (DIGITAL Board (2/3))

Pin No.	Pin Name	I/O	Pin Description
1	VSS	—	Ground
2	XRST	I	Reset signal input from SYSTEM CONTROL IC
3	EXTIN	I	Not used (Connect to ground)
4	LRCKI3	I	Not used (Connect to ground)
5	VDDI	I	Power supply pin (+2.6 V)
6	BCKI3	I	Not used (Connect to ground)
7	PLOCK	O	Not used (Open)
8	VSS	—	Ground
9	MCLK1	I	Clock signal input (13.5 MHz)
10	VDDI	I	Power supply pin (+2.6 V)
11	VSS	—	Ground
12	MCLK2	O	Clock signal output (13.5 MHz)
13	MS	I	Not used (Fixed at L)
14	SCKOUT	O	Internal system clock signal output for 2CH/6CH DAC IC
15	LRCKI1	I	Sampling clock signal input from ADC IC
16	VDDE	I	Power supply pin (+3.3 V)
17	BCKI1	I	Bit clock signal input from ADC IC
18	SDI1	I	Audio IF data input from ADC IC
19	LRCKO	O	Sampling clock signal output for 2CH/6CH DAC IC
20	BCKO	O	Bit clock signal output for 2CH/6CH DAC IC
21	VSS	—	Ground
22	KFSIO	I/O	Audio clock signal (384fs/256fs) input/output for DIR IC
23 to 25	SDO1 to SDO3	O	Digital audio serial data output for 6CH DAC IC
26	SDO4	O	Digital audio serial data output for 2CH DAC IC
27	SPDIF	O	Not used (Open)
28	LRCKI2	I	Sampling clock signal input from ADC IC
29	BCKI2	I	Bit clock signal input from ADC IC
30	SDI2	I	Digital audio serial data input from DIR IC
31	VSS	—	Ground
32	HACN	O	Acknowledge signal output for SYSTEM CONTROL IC
33	HDIN	I	Serial data input from SYSTEM CONTROL IC
34	HCLK	I	Clock signal input from SYSTEM CONTROL IC
35	HDOUT	O	Serial data output for SYSTEM CONTROL IC
36	HCS	I	Chip select signal input from SYSTEM CONTROL IC
37	GP12	I	GP12 signal input from SYSTEM CONTROL IC
38, 39	GP13, GP14	O	Not used (Open)
40	VDDI	I	Power supply pin (+2.6 V)
41	VSS	—	Ground
42	GP15	O	Not used (Open)
43	OE0	O	Not used (Open)
44	CS0	O	External memory chip select signal output for D/A converter IC (SDRAM)
45	WE0	O	SDRAM write enable signal output for D/A converter IC (SDRAM)
46	VDDE	I	Power supply pin (+3.3 V)
47	WMD1	I	Not used (Fixed at H)
48	VSS	—	Ground
49	WMD0	I	Not used (Fixed at H)
50	PAGE2	O	Not used (Open)
51	VSS	—	Ground
52, 53	PAGE1, PAGE0	O	Not used (Open)
54	BOOT	I	Not used (Connect to ground)
55	TST1	O	Not used (Open)

Pin No.	Pin Name	I/O	Pin Description
56	BST	I	Boot stop signal input from SYSTEM CONTROL IC
57	MOD1	I	Operation mode signal input (L: 386fs, H: 256fs) (Fixed at H)
58	MOD0	I	Operation mode signal input (L: single chip mode, H: use prohibited) (Fixed at L)
59	EXLOCK	I	Error detection signal input from DIR IC
60	VDDI	I	Power supply pin (+2.6 V)
61	VSS	—	Ground
62, 63	A17, A16	O	Not used (Open)
64 to 66	A15 to A13	O	External memory address signal output for D/A converter IC (SDRAM)
67	GP10	O	Not used (Open)
68	GP9	O	GP9 signal output for SYSTEM CONTROL IC
69	GP8	I	Audio signal input from DIR IC
70	VDDI	I	Power supply pin (+2.6 V)
71	VSS	—	Ground
72 to 75	D15/GP7 to D12/GP4	I/O	External memory data input/output for D/A converter IC (general port)
76	VDDE	I	Power supply pin (+3.3 V)
77 to 80	D11/GP3 to D8/GP0	I/O	External memory data input/output for D/A converter IC (general port)
81	VSS	—	Ground
82	A9	O	External memory address signal output for D/A converter IC (SDRAM)
83 to 85	A12 to A10	O	External memory address signal output for D/A converter IC (SDRAM)
86	TDO	O	Not used (Fixed at H)
87	TMS	I	Not used (Fixed at H)
88	XTRST	I	Not used (Fixed at H)
89	TCK	I	Not used (Fixed at H)
90	TDI	I	Not used (Fixed at H)
91	VSS	—	Ground
92 to 97	A8 to A3	O	External memory address signal output for D/A converter IC (SDRAM)
98, 99	D7, D6	I/O	External memory data input/output for D/A converter IC (SDRAM)
100	VDDI	I	Power supply pin (+2.6 V)
101	VSS	—	Ground
102 to 105	D5 to D2	I/O	External memory data input/output for D/A converter IC (SDRAM)
106	VDDE	I	Power supply pin (+3.3 V)
107, 108	D1, D0	I/O	External memory data input/output for D/A converter IC (SDRAM)
109, 110	A2, A1	O	External memory address signal output for D/A converter IC (SDRAM)
111	VSS	—	Ground
112	A0	O	External memory address signal output for D/A converter IC (SDRAM)
113	PM	I	PLL initialization signal input from SYSTEM CONTROL IC
114, 115	SDI3, SDI4	I	Not used (Open)
116	SYNC	I	Sync/async select signal input (L: sync, H: async) (Fixed at H)
117	TST2	I	Not used (Connect to ground)
118	GP11	I	Not used (Connect to ground)
119	TST3	I	Not used (Connect to ground)
120	VDDI	I	Power supply pin (+2.6 V)

IC1101 MB90478PF-G-183-BND (SYSTEM CONTROL) (DIGITAL Board (3/3))

Pin No.	Pin Name	I/O	Pin Description
1	DATAO	I	Serial data line signal input from DIR IC
2	GP9	I	GP9 signal input from DSP IC
3	BST	O	Boot stop control signal output for DSP IC
4	HCS	O	Chip select signal output for DSP IC
5	HACN	I	Acknowledge signal input from DSP IC
6	XRST	O	Reset signal output for DSP IC
7	PM	O	PLL control signal output for DSP IC
8	GP12	O	GP12 signal output for DSP IC
9	AK5380_PDN	O	Power down signal output for ADC IC
10	AK4355_CSN	O	Chip select signal output for 6CH DAC IC
11	VSS	—	Ground
12	AK4355_PDN	O	Power down signal output for 6CH DAC IC
13	AK4381_PDN	O	Power down signal output for 2CH DAC IC
14	AK4381_CSN	O	Chip select signal output for 2CH DAC IC
15	AK4355_CLK	O	Clock signal output for 2CH/6CH DAC IC
16	IC_CLK (VOL_TUNER_TC9273)	O	Clock signal output for FUNCTION SELECT IC and tuner pack
17	IC_DATA (VOL_TUNER_TC9273)	O	Serial data signal output for FUNCTION SELECT IC and tuner pack
18	HDOUT	I	Serial data input from DSP IC
19	HDIN	O	Serial data output for DSP IC
20	HCLK	O	Serial data clock signal output for DSP IC
21	AK4355_CDT1	O	CDT1 signal output for 2CH/6CH DAC IC
22	VOL_LATCH	O	Latch signal output for FUNCTION SELECT IC
23	VCC5	—	Power supply pin (+3.3 V)
24	SYS_MUTE	O	System mute control signal output
25	ANA/DIG	O	Muting and error port signal output
26	FL_CLEAR	O	Not used (Open)
27	FLASH2	—	Flash programming signal output 2
28	FLASH1	—	Flash programming signal output 1
29, 30	ENC_A, ENC_B	—	Not used (Fixed at L)
31, 32	F_A, F_B	—	Not used (Fixed at L)
33	SCL	O	Clock signal output for EEPROM IC
34	SDA	I/O	Serial data input/output for EEPROM IC
35	AVCC	—	Power supply pin (+3.3 V)
36	AVRH	—	Power supply pin (+3.3 V)
37	AVSS	—	Ground
38 to 40	A/D0 to A/D2	I	Key signal input (A/D port)
41	VERSION	I	Destination detection signal input (Fixed at L: STR-K6800P, H: STR-DE597P)
42	VSS	—	Ground
43	RDS_SIG	I	RDS signal level input (STR-DE597P: AEP, UK model only)
44	MODEL	I	Model detection signal input
45	VOL_ENC (A)	I	Volume encoder (A) signal input
46	VOL_ENC (B)	I	Volume encoder (B) signal input
47	BLUE_LED	O	LED (MULTI CHANNEL DECODING) driver signal output
48	STOP	I	AC off detection signal input
49	MOD0	—	Selection of micon operation mode
50	MOD1	—	Not used (Connect to AVCC)
51	MOD2	—	Selection of micon operation mode
52	RDS_CLK	I	RDS data clock signal input (STR-DE597P: AEP, UK model only)
53	RDS_DATA	I	RDS data input (STR-DE597P: AEP, UK model only)

Pin No.	Pin Name	I/O	Pin Description
54	SIRCS	I	SIRCS signal input
55	HP_DETECT	I	Headphones detection signal input
56	POWER_KEY	I	Power key detection signal input
57	FL_LAT	O	Latch signal output for FL display driver IC
58	POWER_RY	O	Power relay driver control signal output
59	FL_DATA	O	Serial data output for FL display driver IC
60	FL_CLK	O	Clock signal output for FL display driver IC
61	PROTECTOR	I	Protector detection signal input
62	HP_RY	O	Headphones relay driver control signal output
63	FUSE_DETECT	I	Fuse open detection signal input
64	A1_OUT	O	Not used (Fixed at L)
65	A1_IN	I	Not used (Fixed at L)
66	FRONT_RY	O	Front speaker A relay driver control signal output
67	SP_B_RY	O	Front speaker B relay driver control signal output
68	C_RY	O	Center speaker relay driver control signal output
69	REAR_RY	O	Surround speaker relay driver control signal output
70	SW_RY	O	Sub woofer relay driver control signal output
71	NC	—	Not used (Fixed at L)
72	BRIDGEABLE_RY	O	Bridgeable relay driver control signal output
73	D0	I	Tuner serial data input
74	SLATCH	O	Tuner latch signal output
75	TUNED	I	Tuned signal detection input
76	STEREO	I	Stereo signal detection input
77	RSTX	I	Reset signal input
78	MUTE	O	Tuner mute signal output
79	X1A	—	Not used (Open)
80	X0A	—	Not used (Connect to VSS)
81	VSS	—	Ground
82	X0	—	Clock signal input (16 MHz)
83	X1	—	Clock signal output (16 MHz)
84	VCC3	—	Power supply pin (+3.3 V)
85	GROUPING_SW	—	Not used (Open)
86 to 89	SW1 to SW4	O	Video select signal output
90	SELECT2	O	Digital input select 2 signal output
91	SELECT1	O	Digital input select 1 signal output
92	BST_SEL	O	96/24 signal output for DSP IC
93	XMODE	O	Xmode signal output for DIR IC
94	CKSEL1	O	Clock select signal output for DIR IC
95	CLK	O	Data clock signal output for DIR IC
96	CE	O	Latch signal output for DIR IC
97	DI	O	Data output for DIR IC
98	DO	I	Data input from DIR IC
99	ERROR	I	Error detection signal input from DIR IC
100	XSTATE	I	Xstate signal input from DIR IC

SECTION 5
EXPLODED VIEWS

NOTE:
- The mechanical parts with no reference number in the exploded views are not supplied.
- Items marked "*" are not stocked since they are seldom required for routine service. Some delay should be anticipated when ordering these items.
- Abbreviation
  AUS : Australian model
- -XX and -X mean standardized parts, so they may have some difference from the original one.
- Color Indication of Appearance Parts
  Example :
  KNOB, BALANCE (WHITE) ... (RED)
  ↑ Parts Color ↑ Cabinet's Color
- Accessories are given in the last of this parts list.

The components identified by mark ⚠ or dotted line with mark ⚠ are critical for safety.
Replace only with part number specified.

5-1. CASE SECTION

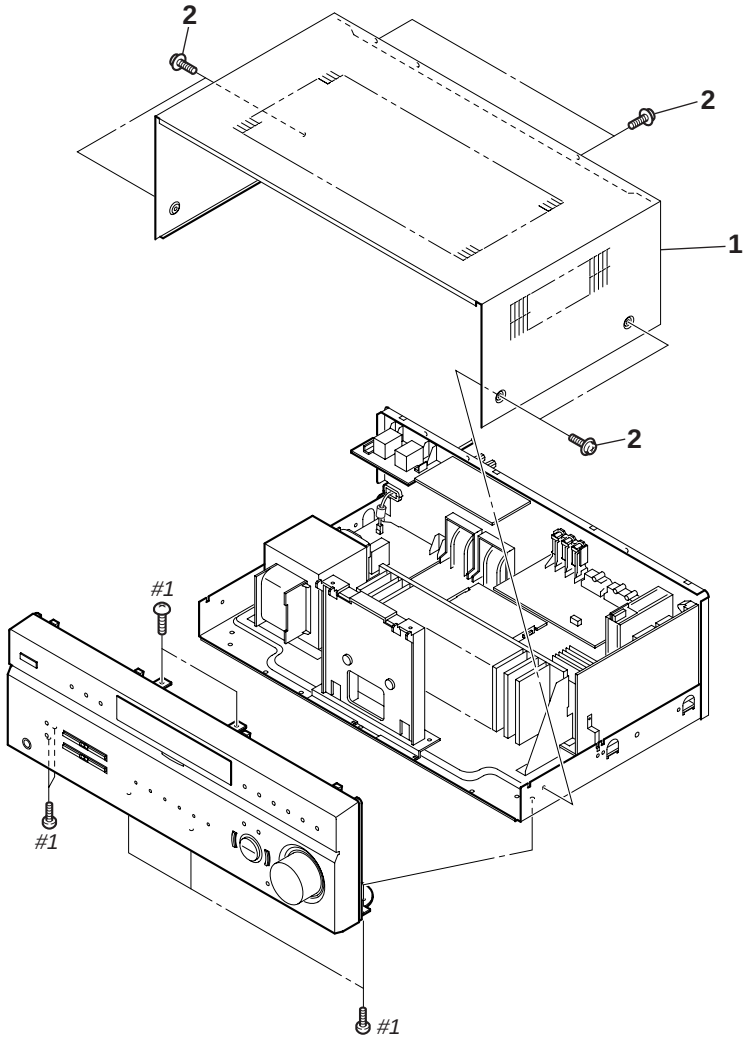

Ref. No.	Part No.	Description	Remark
1	2-109-162-01	CASE (K6800P)	
1	4-232-418-22	CASE (DE597P)	
2	3-070-883-11	SCREW, TAPPING (K6800P)	
2	4-210-291-11	SCREW (CASE 3 TP2) (DE597P)	
#1	7-685-646-79	SCREW +BVTP 3X8 TYPE2 IT-3	

5-2. FRONT PANEL SECTION

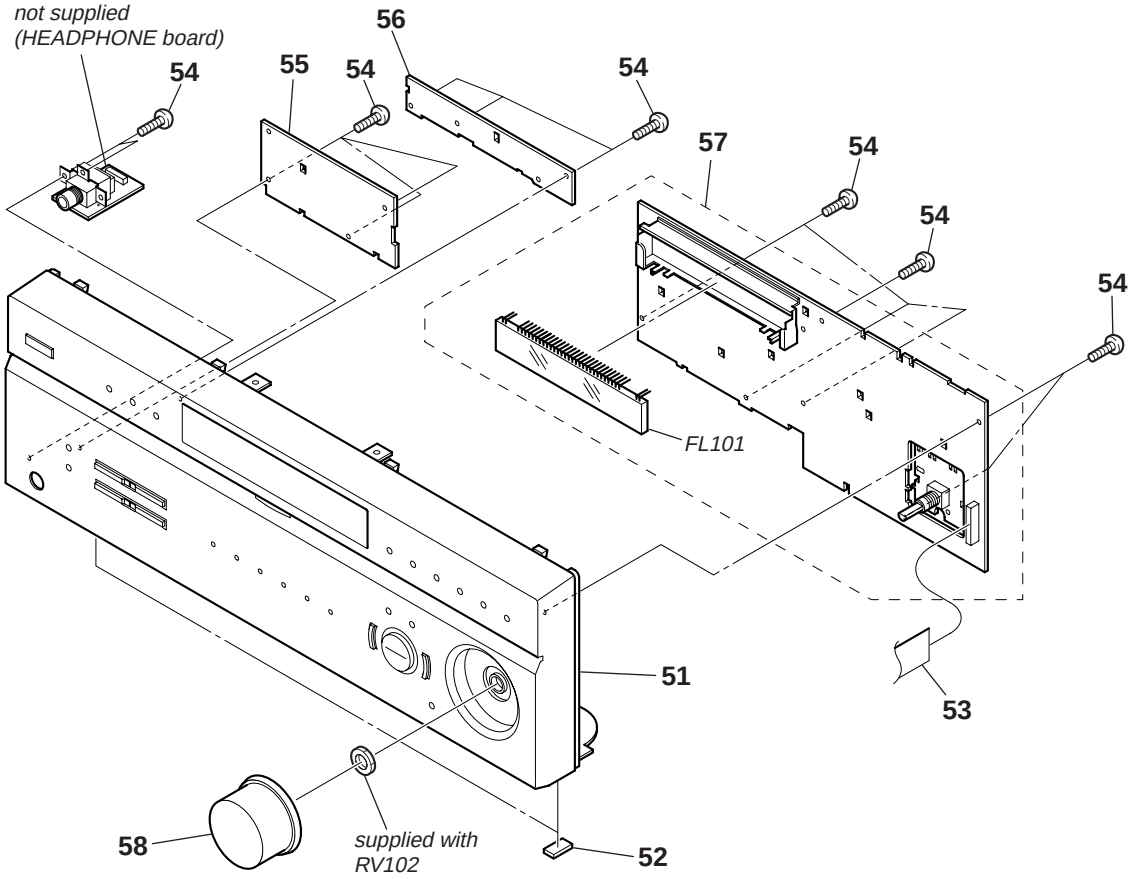

Ref. No.	Part No.	Description	Remark
51	X-4956-172-A	PANEL ASSY, FRONT (K6800P)	
51	X-4956-442-A	PANEL ASSY, FRONT (DE597P:AEP,UK)	
51	X-4956-445-1	PANEL ASSY, FRONT (DE597P:AUS)	
52	4-977-358-01	CUSHION	
53	1-773-150-11	WIRE (FLAT TYPE) (21 CORE)	
54	4-951-620-01	SCREW (2.6X8), +BVTP	

Ref. No.	Part No.	Description	Remark
55	1-861-056-11	TUNING BOARD	
56	1-861-057-11	POWER BOARD	
57	A-4750-654-A	DISPLAY BOARD, COMPLETE	
58	4-232-113-12	KNOB (VOL)	
FL101	1-518-966-11	VACUUM FLUORESCENT DISPLAY	

5-3. BACK PANEL SECTION

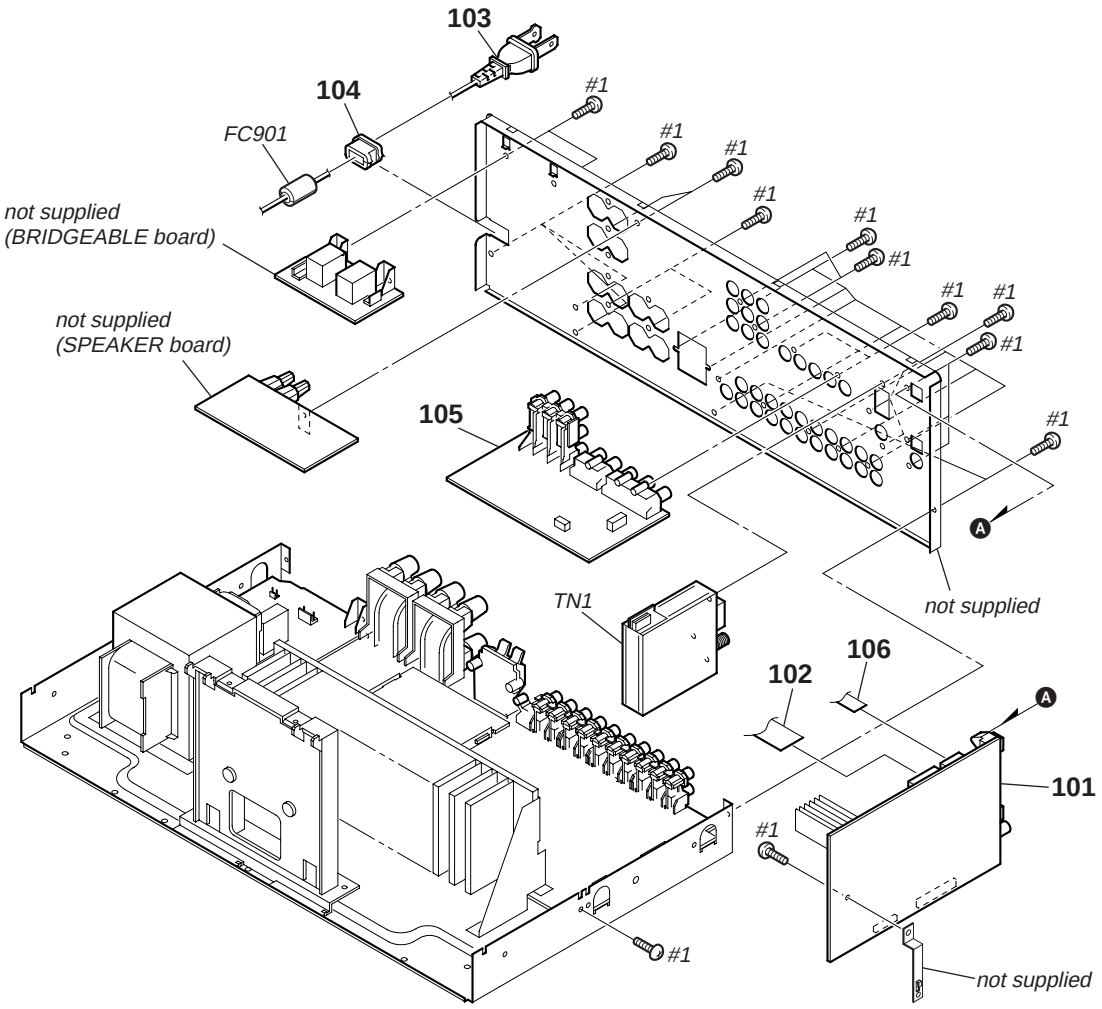

The components identified by mark ⚠ or dotted line with mark ⚠ are critical for safety.
Replace only with part number specified.

Ref. No.	Part No.	Description	Remark
101	A-4750-693-A	DIGITAL BOARD, COMPLETE (K6800P)	
101	A-4752-800-A	DIGITAL BOARD, COMPLETE (DE597P:AEP,UK)	
101	A-4752-807-A	DIGITAL BOARD, COMPLETE (DE597P:AUS)	
102	1-769-937-11	WIRE (FLAT TYPE) (11 CORE)	(DE597P:AUS/K6800P)
102	1-773-001-11	WIRE (FLAT TYPE) (15 CORE) (DE597P:AEP,UK)	
⚠103	1-777-071-23	CORD, POWER (AEP,UK)	
⚠103	1-783-820-11	CORD, POWER (US)	
⚠103	1-827-295-22	CORD, POWER (AUS)	
* 104	3-703-244-00	BUSHING (2104), CORD	

Ref. No.	Part No.	Description	Remark
105	A-4750-662-A	VIDEO BOARD, COMPLETE	(DE597P:AUS/K6800P)
105	A-4750-721-A	VIDEO BOARD, COMPLETE (DE597P:AEP,UK)	
106	1-769-879-11	WIRE (FLAT TYPE) (7 CORE)	
FC901	1-500-386-11	FILTER, CLAMP (FERRITE CORE) (K6800P)	
TN1	1-693-577-13	TUNER PACK (ANTENNA) (K6800P)	
TN1	1-693-578-13	TUNER PACK (ANTENNA) (DE597P:AEP,UK)	
TN1	1-693-580-21	TUNER PACK (ANTENNA) (DE597P:AUS)	
#1	7-685-646-79	SCREW +BVTP 3X8 TYPE2 IT-3	

5-4. CHASSIS SECTION

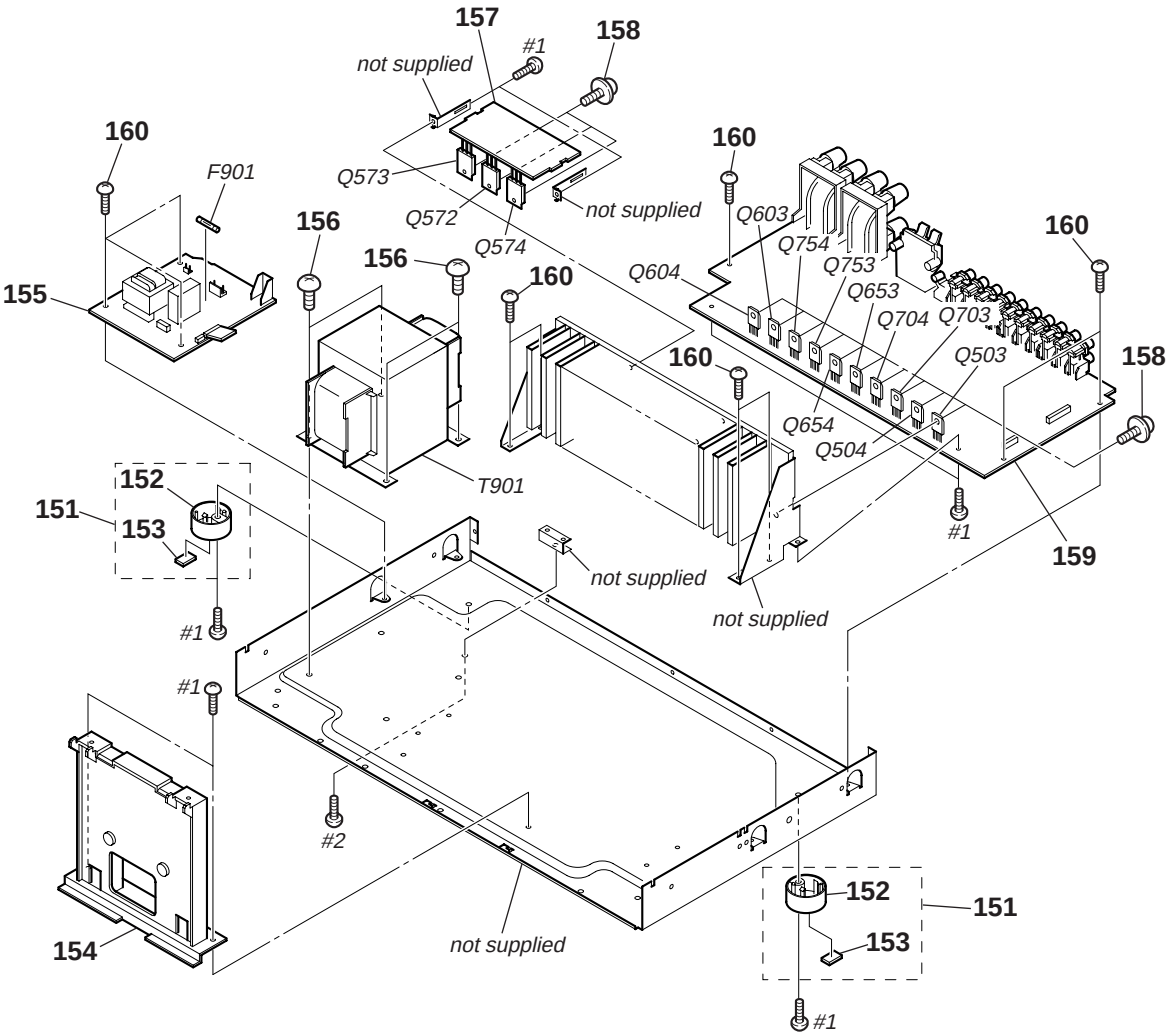

The components identified by mark ⚠ or dotted line with mark ⚠ are critical for safety.
Replace only with part number specified.

Ref. No.	Part No.	Description	Remark
151	X-4953-448-1	FOOT ASSY	
152	4-232-237-01	FOOT (DIA.30)	
153	4-977-358-01	CUSHION	
154	4-233-263-01	SUB MOLD (DE9)	
155	A-4750-646-A	STANDBY BOARD, COMPLETE (K6800P)	
155	A-4750-714-A	STANDBY BOARD, COMPLETE (DE597P)	
156	4-249-675-01	+BV SUMITITE S 4X6 ROUND	
157	A-1054-382-A	SB AMP BOARD, COMPLETE	
158	3-905-609-01	SCREW (TRANSISTOR)	
159	A-1054-392-A	MAIN BOARD, COMPLETE (DE597P)	
159	A-4750-690-A	MAIN BOARD, COMPLETE (K6800P)	
160	3-970-608-01	SUMITITE (B3), +BV	
⚠F901	1-532-464-32	FUSE (T2.5AL/250V) (AEP,UK,AUS)	
⚠F901	1-533-454-12	FUSE, GLASS TUBE (DIA.5) (6.3A/125V) (US)	
Q503	8-749-010-25	TRANSISTOR MN2488-OPY-M	
Q504	8-749-010-26	TRANSISTOR MP1620-OPY-M	

Ref. No.	Part No.	Description	Remark
Q572	8-729-026-08	TRANSISTOR 2SC4495	
Q573	8-749-010-25	TRANSISTOR MN2488-OPY-M	
Q574	8-749-010-26	TRANSISTOR MP1620-OPY-M	
Q603	8-749-010-25	TRANSISTOR MN2488-OPY-M	
Q604	8-749-010-26	TRANSISTOR MP1620-OPY-M	
Q653	8-749-010-25	TRANSISTOR MN2488-OPY-M	
Q654	8-749-010-26	TRANSISTOR MP1620-OPY-M	
Q703	8-749-010-25	TRANSISTOR MN2488-OPY-M	
Q704	8-749-010-26	TRANSISTOR MP1620-OPY-M	
Q753	8-749-010-25	TRANSISTOR MN2488-OPY-M	
Q754	8-749-010-26	TRANSISTOR MP1620-OPY-M	
⚠T901	1-439-550-12	TRANSFORMER, POWER (AEP,UK,AUS)	
⚠T901	1-439-583-11	TRANSFORMER, POWER (US)	
#1	7-685-646-79	SCREW +BVTP 3X8 TYPE2 IT-3	
#2	7-685-645-79	SCREW +BVTP 3X6 TYPE2 N-S	

BRIDGEABLE DIGITAL

SECTION 6
ELECTRICAL PARTS LIST

NOTE:
- Due to standardization, replacements in the parts list may be different from the parts specified in the diagrams or the components used on the set.
- -XX and -X mean standardized parts, so they may have some difference from the original one.
- RESISTORS
  All resistors are in ohms.
  METAL:Metal-film resistor.
  METAL OXIDE: Metal oxide-film resistor.
  F:nonflammable
- Items marked "*" are not stocked since they are seldom required for routine service. Some delay should be anticipated when ordering these items.
- SEMICONDUCTORS
  In each case, u : µ, for example:
  uA.. : µA.. uPA.. : µPA..
  uPB.. : µPB.. uPC.. : µPC.. uPD.. : µPD..
- CAPACITORS
  uF : µF
- COILS
  uH : µH
- Abbreviation
  AUS : Australian model

The components identified by mark ⚠ or dotted line with mark ⚠ are critical for safety.
Replace only with part number specified.

When indicating parts by reference number, please include the board.

Ref. No.	Part No.	Description				Remark
		BRIDGEABLE BOARD				
		**********				
		< CONNECTOR >				
* CN906	1-564-104-00	PIN, CONNECTOR (3.96mm PITCH) 3P				
* CN908	1-564-242-00	PIN, CONNECTOR (3.96mm PITCH) 5P				
		< DIODE >				
D818	8-719-991-33	DIODE 1SS133T-77				
		< TRANSISTOR >				
Q809	8-729-119-79	TRANSISTOR 2SC2785-FEK				
		< RESISTOR >				
R824	1-247-847-11	CARBON	4.7K	5%	1/4W	
R830	1-249-404-00	CARBON	82	5%	1/4W	F
		< RELAY >				
RY801	1-755-013-11	RELAY				
**********						
	A-4750-693-A	DIGITAL BOARD, COMPLETE (K6800P)				
	A-4752-800-A	DIGITAL BOARD, COMPLETE (DE597P:AEP,UK)				
	A-4752-807-A	DIGITAL BOARD, COMPLETE (DE597P:AUS)				
		**********				
	7-685-646-79	SCREW +BVTP 3X8 TYPE2 IT-3				
		< CAPACITOR >				
C1001	1-126-925-11	ELECT	470uF	20%	10V	
C1002	1-164-156-11	CERAMIC CHIP	0.1uF		25V	
C1003	1-162-968-11	CERAMIC CHIP	0.0047uF	10%	50V	
C1021	1-164-156-11	CERAMIC CHIP	0.1uF		25V	
C1022	1-126-925-11	ELECT	470uF	20%	10V	
C1031	1-164-156-11	CERAMIC CHIP	0.1uF		25V	
C1032	1-126-925-11	ELECT	470uF	20%	10V	
C1063	1-164-156-11	CERAMIC CHIP	0.1uF		25V	(DE597P:AEP,UK)
C1064	1-126-204-11	ELECT CHIP	47uF	20%	16V	(DE597P:AEP,UK)
C1100	1-164-156-11	CERAMIC CHIP	0.1uF		25V	
C1102	1-164-156-11	CERAMIC CHIP	0.1uF		25V	
C1103	1-126-204-11	ELECT CHIP	47uF	20%	16V	
C1107	1-164-156-11	CERAMIC CHIP	0.1uF		25V	
C1108	1-164-156-11	CERAMIC CHIP	0.1uF		25V	

Ref. No.	Part No.	Description			Remark
C1118	1-164-156-11	CERAMIC CHIP	0.1uF		25V
C1119	1-164-156-11	CERAMIC CHIP	0.1uF		25V
C1120	1-162-974-11	CERAMIC CHIP	0.01uF		50V
C1121	1-164-156-11	CERAMIC CHIP	0.1uF		25V
C1122	1-164-156-11	CERAMIC CHIP	0.1uF		25V
C1123	1-164-156-11	CERAMIC CHIP	0.1uF		25V
C1124	1-164-156-11	CERAMIC CHIP	0.1uF		25V
C1126	1-162-960-11	CERAMIC CHIP	220PF	10%	50V
C1129	1-162-974-11	CERAMIC CHIP	0.01uF		50V
C1130	1-162-974-11	CERAMIC CHIP	0.01uF		50V
C1137	1-162-970-11	CERAMIC CHIP	0.01uF	10%	25V
C1138	1-164-156-11	CERAMIC CHIP	0.1uF		25V
C1139	1-164-156-11	CERAMIC CHIP	0.1uF		25V
C1140	1-164-156-11	CERAMIC CHIP	0.1uF		25V
C1141	1-164-156-11	CERAMIC CHIP	0.1uF		25V
C1142	1-164-156-11	CERAMIC CHIP	0.1uF		25V
C1251	1-164-156-11	CERAMIC CHIP	0.1uF		25V
C1252	1-164-156-11	CERAMIC CHIP	0.1uF		25V
C1253	1-164-156-11	CERAMIC CHIP	0.1uF		25V
C1254	1-162-960-11	CERAMIC CHIP	220PF	10%	50V
C1255	1-162-960-11	CERAMIC CHIP	220PF	10%	50V
C1299	1-164-156-11	CERAMIC CHIP	0.1uF		25V
C1301	1-164-156-11	CERAMIC CHIP	0.1uF		25V
C1302	1-162-974-11	CERAMIC CHIP	0.01uF		50V
C1303	1-164-156-11	CERAMIC CHIP	0.1uF		25V
C1304	1-162-974-11	CERAMIC CHIP	0.01uF		50V
C1305	1-164-156-11	CERAMIC CHIP	0.1uF		25V
C1306	1-126-204-11	ELECT CHIP	47uF	20%	16V
C1308	1-164-156-11	CERAMIC CHIP	0.1uF		25V
C1309	1-162-918-11	CERAMIC CHIP	18PF	5%	50V
C1310	1-162-918-11	CERAMIC CHIP	18PF	5%	50V
C1312	1-164-156-11	CERAMIC CHIP	0.1uF		25V
C1313	1-162-927-11	CERAMIC CHIP	100PF	5%	50V
C1314	1-164-156-11	CERAMIC CHIP	0.1uF		25V
C1315	1-164-156-11	CERAMIC CHIP	0.1uF		25V
C1316	1-164-156-11	CERAMIC CHIP	0.1uF		25V
C1317	1-126-925-11	ELECT	470uF	20%	10V
C1351	1-164-156-11	CERAMIC CHIP	0.1uF		25V
C1354	1-164-156-11	CERAMIC CHIP	0.1uF		25V
C1355	1-126-395-11	ELECT CHIP	22uF	20%	16V
C1357	1-162-905-11	CERAMIC CHIP	1PF	0.25PF	50V
C1358	1-164-156-11	CERAMIC CHIP	0.1uF		25V
C1359	1-126-916-11	ELECT	1000uF	20%	6.3V
C1360	1-162-923-11	CERAMIC CHIP	47PF	5%	50V
C1361	1-164-156-11	CERAMIC CHIP	0.1uF		25V

Ref. No.	Part No.	Description			Remark
C1362	1-162-974-11	CERAMIC CHIP	0.01uF		50V
C1401	1-124-261-00	ELECT	10uF	20%	50V
C1402	1-126-964-11	ELECT	10uF	20%	50V
C1403	1-126-925-11	ELECT	470uF	20%	10V
C1404	1-164-156-11	CERAMIC CHIP	0.1uF		25V
C1405	1-164-156-11	CERAMIC CHIP	0.1uF		25V
C1406	1-126-925-11	ELECT	470uF	20%	10V
C1407	1-164-156-11	CERAMIC CHIP	0.1uF		25V
C1408	1-164-156-11	CERAMIC CHIP	0.1uF		25V
C1411	1-162-967-11	CERAMIC CHIP	0.0033uF	10%	50V
C1412	1-162-962-11	CERAMIC CHIP	470PF	10%	50V
C1413	1-162-962-11	CERAMIC CHIP	470PF	10%	50V
C1416	1-164-156-11	CERAMIC CHIP	0.1uF		25V
C1417	1-164-156-11	CERAMIC CHIP	0.1uF		25V
C1418	1-126-964-11	ELECT	10uF	20%	50V
C1421	1-162-967-11	CERAMIC CHIP	0.0033uF	10%	50V
C1422	1-162-962-11	CERAMIC CHIP	470PF	10%	50V
C1423	1-162-962-11	CERAMIC CHIP	470PF	10%	50V
C1428	1-126-964-11	ELECT	10uF	20%	50V
C1431	1-162-967-11	CERAMIC CHIP	0.0033uF	10%	50V
C1432	1-162-962-11	CERAMIC CHIP	470PF	10%	50V
C1433	1-162-962-11	CERAMIC CHIP	470PF	10%	50V
C1438	1-126-964-11	ELECT	10uF	20%	50V
C1441	1-162-967-11	CERAMIC CHIP	0.0033uF	10%	50V
C1442	1-162-962-11	CERAMIC CHIP	470PF	10%	50V
C1443	1-162-962-11	CERAMIC CHIP	470PF	10%	50V
C1448	1-126-964-11	ELECT	10uF	20%	50V
C1450	1-164-156-11	CERAMIC CHIP	0.1uF		25V
C1451	1-162-967-11	CERAMIC CHIP	0.0033uF	10%	50V
C1452	1-162-962-11	CERAMIC CHIP	470PF	10%	50V
C1453	1-162-962-11	CERAMIC CHIP	470PF	10%	50V
C1454	1-164-156-11	CERAMIC CHIP	0.1uF		25V
C1455	1-124-779-00	ELECT CHIP	10uF	20%	16V
C1456	1-164-156-11	CERAMIC CHIP	0.1uF		25V
C1457	1-124-779-00	ELECT CHIP	10uF	20%	16V
C1458	1-126-964-11	ELECT	10uF	20%	50V
C1459	1-164-156-11	CERAMIC CHIP	0.1uF		25V
C1460	1-124-779-00	ELECT CHIP	10uF	20%	16V
C1461	1-162-967-11	CERAMIC CHIP	0.0033uF	10%	50V
C1462	1-162-962-11	CERAMIC CHIP	470PF	10%	50V
C1463	1-162-962-11	CERAMIC CHIP	470PF	10%	50V
C1468	1-126-964-11	ELECT	10uF	20%	50V
C1471	1-162-967-11	CERAMIC CHIP	0.0033uF	10%	50V
C1472	1-162-962-11	CERAMIC CHIP	470PF	10%	50V
C1473	1-162-962-11	CERAMIC CHIP	470PF	10%	50V
C1478	1-126-964-11	ELECT	10uF	20%	50V
C1481	1-162-967-11	CERAMIC CHIP	0.0033uF	10%	50V
C1482	1-162-962-11	CERAMIC CHIP	470PF	10%	50V
C1483	1-162-962-11	CERAMIC CHIP	470PF	10%	50V
C1487	1-162-966-11	CERAMIC CHIP	0.0022uF	10%	50V
C1491	1-126-964-11	ELECT	10uF	20%	50V
C1494	1-164-156-11	CERAMIC CHIP	0.1uF		25V
C1495	1-164-156-11	CERAMIC CHIP	0.1uF		25V
C1496	1-124-779-00	ELECT CHIP	10uF	20%	16V
C1501	1-164-156-11	CERAMIC CHIP	0.1uF		25V
C1502	1-164-156-11	CERAMIC CHIP	0.1uF		25V
C1503	1-164-156-11	CERAMIC CHIP	0.1uF		25V
C1504	1-164-156-11	CERAMIC CHIP	0.1uF		25V
C1505	1-164-156-11	CERAMIC CHIP	0.1uF		25V
C1506	1-164-156-11	CERAMIC CHIP	0.1uF		25V
C1507	1-164-156-11	CERAMIC CHIP	0.1uF		25V
C1508	1-164-156-11	CERAMIC CHIP	0.1uF		25V
C1509	1-164-156-11	CERAMIC CHIP	0.1uF		25V
C1510	1-164-156-11	CERAMIC CHIP	0.1uF		25V
C1511	1-164-156-11	CERAMIC CHIP	0.1uF		25V
C1513	1-164-156-11	CERAMIC CHIP	0.1uF		25V
C1514	1-164-156-11	CERAMIC CHIP	0.1uF		25V
C1515	1-126-925-11	ELECT	470uF	20%	10V
C1516	1-164-156-11	CERAMIC CHIP	0.1uF		25V
C1517	1-126-925-11	ELECT	470uF	20%	10V
C1518	1-164-156-11	CERAMIC CHIP	0.1uF		25V
C1519	1-164-156-11	CERAMIC CHIP	0.1uF		25V
C1520	1-164-156-11	CERAMIC CHIP	0.1uF		25V
C1521	1-162-920-11	CERAMIC CHIP	27PF	5%	50V
C1522	1-162-920-11	CERAMIC CHIP	27PF	5%	50V
C1525	1-126-925-11	ELECT	470uF	20%	10V
C1547	1-162-966-11	CERAMIC CHIP	0.0022uF	10%	50V
C1557	1-162-966-11	CERAMIC CHIP	0.0022uF	10%	50V
C1566	1-162-966-11	CERAMIC CHIP	0.0022uF	10%	50V
C1567	1-162-966-11	CERAMIC CHIP	0.0022uF	10%	50V
C1568	1-162-966-11	CERAMIC CHIP	0.0022uF	10%	50V
C1569	1-162-966-11	CERAMIC CHIP	0.0022uF	10%	50V
C1604	1-164-156-11	CERAMIC CHIP	0.1uF		25V
C1605	1-164-156-11	CERAMIC CHIP	0.1uF		25V
C1620	1-164-156-11	CERAMIC CHIP	0.1uF		25V
C1905	1-164-156-11	CERAMIC CHIP	0.1uF		25V
C1906	1-126-925-11	ELECT	470uF	20%	10V
C1908	1-126-925-11	ELECT	470uF	20%	10V
C1913	1-164-156-11	CERAMIC CHIP	0.1uF		25V
C1914	1-126-204-11	ELECT CHIP	47uF	20%	16V

< CONNECTOR >

CNP506	1-779-799-11	PIN, CONNECTOR 9P
CNP507	1-784-922-11	PIN, CONNECTOR 5P
CNP510	1-784-923-11	PIN, CONNECTOR 7P
CNS501	1-766-720-41	CONNECTOR, BOARD TO BOARD 17P
CNS502	1-766-719-41	CONNECTOR, BOARD TO BOARD 10P
CNS505	1-568-838-11	CONNECTOR, FFC 21P
CNS508	1-568-830-11	CONNECTOR, FFC 11P (DE597P:AUS/K6800P)
CNS508	1-784-776-11	CONNECTOR, FFC 15P (DE597P:AEP,UK)
CNS509	1-568-826-11	CONNECTOR, FFC 7P

< DIODE >

D1003	8-719-049-09	DIODE 1SS367-T3SONY
D1004	8-719-049-09	DIODE 1SS367-T3SONY
D1103	8-719-988-61	DIODE 1SS355TE-17
D1105	8-719-988-61	DIODE 1SS355TE-17
D1106	8-719-988-61	DIODE 1SS355TE-17
D1107	8-719-988-61	DIODE 1SS355TE-17
D1108	8-719-988-61	DIODE 1SS355TE-17
D1110	8-719-988-61	DIODE 1SS355TE-17
D1111	8-719-988-61	DIODE 1SS355TE-17
D1301	8-719-988-61	DIODE 1SS355TE-17
D1302	8-719-016-74	DIODE 1SS352

DIGITAL

Ref. No.	Part No.	Description	Remark
		< FERRITE BEAD >	
FB1101	1-414-235-22	INDUCTOR, FERRITE BEAD	
FB1302	1-414-235-22	INDUCTOR, FERRITE BEAD	
FB1305	1-414-235-22	INDUCTOR, FERRITE BEAD	
FB1306	1-414-235-22	INDUCTOR, FERRITE BEAD	
FB1309	1-414-235-22	INDUCTOR, FERRITE BEAD	
FB1405	1-414-235-22	INDUCTOR, FERRITE BEAD	
FB1406	1-414-235-22	INDUCTOR, FERRITE BEAD	
FB1451	1-414-235-22	INDUCTOR, FERRITE BEAD	
FB1452	1-414-235-22	INDUCTOR, FERRITE BEAD	
FB1453	1-414-235-22	INDUCTOR, FERRITE BEAD	
FB1501	1-414-235-22	INDUCTOR, FERRITE BEAD	
FB1502	1-414-235-22	INDUCTOR, FERRITE BEAD	
FB1503	1-414-235-22	INDUCTOR, FERRITE BEAD	
		< IC >	
IC1001	8-759-231-53	IC TA7805S	
IC1031	6-705-464-01	IC BA50BC0T	
IC1071	6-702-771-01	IC TA78033LS (DE597P:AEP,UK)	
IC1101	6-804-384-01	IC MB90478PF-G-183-BNDE1	
IC1111	6-702-913-01	IC S-80929CNMC-G8ZT2G	
IC1131	6-704-004-01	IC BR24L16F-WE2	
IC1301	8-759-825-15	IC LC89056W-E	
IC1302	8-759-595-15	IC TC74ACT153F(EL)	
IC1303	8-759-242-70	IC TC7WU04F	
IC1351	6-600-014-01	IC TORX141L (DIGITAL VIDEO 2 IN (OPTICAL))	
IC1354	6-600-014-01	IC TORX141L (DIGITAL SA-CD/CD IN (OPTICAL))	
IC1401	6-702-527-01	IC AK5380VT-E2	
IC1402	8-759-710-97	IC NJM4565M-D	
IC1403	8-759-710-97	IC NJM4565M-D	
IC1404	8-759-710-97	IC NJM4565M-D	
IC1405	8-759-710-97	IC NJM4565M-D	
IC1406	8-759-710-97	IC NJM4565M-D	
IC1451	6-703-704-01	IC AK4381VT-E2	
IC1452	6-703-564-01	IC AK4355VF-E2	
IC1501	6-702-047-01	IC CXD9718Q	
IC1502	6-704-037-01	IC IC61LV6416-15TG	
IC1503	8-759-546-74	IC TC7WH157FU(TE12R)	
IC1901	6-701-887-02	IC SI-3004KWF	
IC1902	8-759-231-57	IC TA7810S	
IC1904	6-705-463-01	IC BA33BC0T	
		< JACK >	
J1301	1-794-972-11	JACK, PIN 1P (DIGITAL DVD IN (COAXIAL))	
		< JUMPER RESISTOR >	
JR1002	1-211-950-11	SHORT CHIP 0	
JR1007	1-211-950-11	SHORT CHIP 0	
JR1008	1-211-950-11	SHORT CHIP 0	
JR1009	1-211-950-11	SHORT CHIP 0	
JR1010	1-211-950-11	SHORT CHIP 0	
JR1020	1-216-864-11	SHORT CHIP 0	
JR1102	1-216-864-11	SHORT CHIP 0	
JR1202	1-216-864-11	SHORT CHIP 0 (DE597P:AUS/K6800P)	
JR1501	1-216-864-11	SHORT CHIP 0	
JR1511	1-414-235-22	INDUCTOR, FERRITE BEAD	

Ref. No.	Part No.	Description	Remark
		< TRANSISTOR >	
Q1103	8-729-027-43	TRANSISTOR DTC114EKA-T146	
Q1104	8-729-230-49	TRANSISTOR 2SC2712-YG	
Q1105	8-729-230-49	TRANSISTOR 2SC2712-YG	
		< RESISTOR >	
R1035	1-216-829-11	METAL CHIP 4.7K 5% 1/10W	
R1039	1-216-833-11	METAL CHIP 10K 5% 1/10W	
R1041	1-216-809-11	METAL CHIP 100 5% 1/10W	
R1042	1-216-809-11	METAL CHIP 100 5% 1/10W	
R1044	1-216-809-11	METAL CHIP 100 5% 1/10W	
R1049	1-216-833-11	METAL CHIP 10K 5% 1/10W	
R1050	1-216-833-11	METAL CHIP 10K 5% 1/10W	
R1051	1-216-833-11	METAL CHIP 10K 5% 1/10W	
R1052	1-216-833-11	METAL CHIP 10K 5% 1/10W	
R1053	1-216-833-11	METAL CHIP 10K 5% 1/10W	
R1058	1-216-813-11	METAL CHIP 220 5% 1/10W	(DE597P:AEP,UK)
R1059	1-216-813-11	METAL CHIP 220 5% 1/10W	(DE597P:AEP,UK)
R1065	1-216-809-11	METAL CHIP 100 5% 1/10W	
R1066	1-216-809-11	METAL CHIP 100 5% 1/10W	
R1067	1-216-809-11	METAL CHIP 100 5% 1/10W	
R1068	1-216-809-11	METAL CHIP 100 5% 1/10W	
R1071	1-216-827-11	METAL CHIP 3.3K 5% 1/10W	
R1072	1-216-827-11	METAL CHIP 3.3K 5% 1/10W	
R1073	1-216-827-11	METAL CHIP 3.3K 5% 1/10W	
R1075	1-216-809-11	METAL CHIP 100 5% 1/10W	
R1076	1-216-809-11	METAL CHIP 100 5% 1/10W	
R1077	1-216-809-11	METAL CHIP 100 5% 1/10W	
R1078	1-216-809-11	METAL CHIP 100 5% 1/10W	
R1079	1-216-833-11	METAL CHIP 10K 5% 1/10W	
R1082	1-216-809-11	METAL CHIP 100 5% 1/10W	
R1083	1-216-841-11	METAL CHIP 47K 5% 1/10W	
R1085	1-216-809-11	METAL CHIP 100 5% 1/10W	
R1086	1-216-809-11	METAL CHIP 100 5% 1/10W	
R1088	1-216-833-11	METAL CHIP 10K 5% 1/10W	
R1093	1-216-833-11	METAL CHIP 10K 5% 1/10W	(DE597P:AUS/K6800P)
R1094	1-216-833-11	METAL CHIP 10K 5% 1/10W	(DE597P:AUS/K6800P)
R1095	1-216-833-11	METAL CHIP 10K 5% 1/10W	(DE597P:AUS/K6800P)
R1096	1-216-833-11	METAL CHIP 10K 5% 1/10W	
R1097	1-216-845-11	METAL CHIP 100K 5% 1/10W	
R1098	1-216-833-11	METAL CHIP 10K 5% 1/10W	
R1099	1-216-833-11	METAL CHIP 10K 5% 1/10W	
R1105	1-216-833-11	METAL CHIP 10K 5% 1/10W	
R1106	1-216-809-11	METAL CHIP 100 5% 1/10W	
R1107	1-216-829-11	METAL CHIP 4.7K 5% 1/10W	
R1108	1-216-829-11	METAL CHIP 4.7K 5% 1/10W	
R1109	1-216-829-11	METAL CHIP 4.7K 5% 1/10W	
R1110	1-216-829-11	METAL CHIP 4.7K 5% 1/10W	
R1111	1-216-829-11	METAL CHIP 4.7K 5% 1/10W	
R1112	1-216-809-11	METAL CHIP 100 5% 1/10W	
R1113	1-216-809-11	METAL CHIP 100 5% 1/10W	
R1114	1-216-829-11	METAL CHIP 4.7K 5% 1/10W	
R1115	1-216-809-11	METAL CHIP 100 5% 1/10W	

Ref. No.	Part No.	Description			Remark
R1117	1-216-821-11	METAL CHIP	1K	5%	1/10W
R1118	1-216-821-11	METAL CHIP	1K	5%	1/10W
R1119	1-216-821-11	METAL CHIP	1K	5%	1/10W
R1120	1-216-821-11	METAL CHIP	1K	5%	1/10W
R1121	1-216-809-11	METAL CHIP	100	5%	1/10W
R1122	1-216-809-11	METAL CHIP	100	5%	1/10W
R1123	1-216-809-11	METAL CHIP	100	5%	1/10W
R1124	1-216-809-11	METAL CHIP	100	5%	1/10W
R1127	1-216-809-11	METAL CHIP	100	5%	1/10W
R1128	1-216-809-11	METAL CHIP	100	5%	1/10W
R1129	1-216-809-11	METAL CHIP	100	5%	1/10W
R1134	1-216-809-11	METAL CHIP	100	5%	1/10W
R1135	1-216-809-11	METAL CHIP	100	5%	1/10W
R1136	1-216-809-11	METAL CHIP	100	5%	1/10W
R1137	1-216-809-11	METAL CHIP	100	5%	1/10W
R1139	1-216-821-11	METAL CHIP	1K	5%	1/10W
R1140	1-216-809-11	METAL CHIP	100	5%	1/10W
R1142	1-216-809-11	METAL CHIP	100	5%	1/10W
R1143	1-216-809-11	METAL CHIP	100	5%	1/10W
R1144	1-216-809-11	METAL CHIP	100	5%	1/10W
R1145	1-216-829-11	METAL CHIP	4.7K	5%	1/10W
R1147	1-216-833-11	METAL CHIP	10K	5%	1/10W
R1149	1-216-809-11	METAL CHIP	100	5%	1/10W
R1150	1-216-809-11	METAL CHIP	100	5%	1/10W
R1151	1-216-809-11	METAL CHIP	100	5%	1/10W
R1152	1-216-809-11	METAL CHIP	100	5%	1/10W
R1153	1-216-809-11	METAL CHIP	100	5%	1/10W
R1154	1-216-809-11	METAL CHIP	100	5%	1/10W
R1155	1-216-809-11	METAL CHIP	100	5%	1/10W
R1156	1-216-809-11	METAL CHIP	100	5%	1/10W
R1158	1-216-827-11	METAL CHIP	3.3K	5%	1/10W
R1159	1-216-827-11	METAL CHIP	3.3K	5%	1/10W
R1160	1-216-809-11	METAL CHIP	100	5%	1/10W
R1161	1-216-809-11	METAL CHIP	100	5%	1/10W
R1162	1-216-809-11	METAL CHIP	100	5%	1/10W
R1164	1-216-864-11	SHORT CHIP	0		
R1167	1-216-809-11	METAL CHIP	100	5%	1/10W
R1168	1-216-809-11	METAL CHIP	100	5%	1/10W
R1169	1-216-809-11	METAL CHIP	100	5%	1/10W
R1175	1-216-809-11	METAL CHIP	100	5%	1/10W
					(DE597P:AEP,UK)
R1176	1-216-833-11	METAL CHIP	10K	5%	1/10W
R1177	1-216-833-11	METAL CHIP	10K	5%	1/10W
R1178	1-216-833-11	METAL CHIP	10K	5%	1/10W
R1179	1-216-833-11	METAL CHIP	10K	5%	1/10W
R1180	1-216-833-11	METAL CHIP	10K	5%	1/10W
R1185	1-216-845-11	METAL CHIP	100K	5%	1/10W
R1186	1-216-833-11	METAL CHIP	10K	5%	1/10W
R1187	1-216-833-11	METAL CHIP	10K	5%	1/10W
R1189	1-216-833-11	METAL CHIP	10K	5%	1/10W
R1190	1-216-833-11	METAL CHIP	10K	5%	1/10W
R1193	1-216-833-11	METAL CHIP	10K	5%	1/10W
					(DE597P:AUS)
R1193	1-216-841-11	METAL CHIP	47K	5%	1/10W
					(DE597P:AEP,UK)
R1194	1-216-825-11	METAL CHIP	2.2K	5%	1/10W
					(DE597P:AEP,UK)
R1194	1-216-841-11	METAL CHIP	47K	5%	1/10W
					(DE597P:AUS)

Ref. No.	Part No.	Description			Remark
R1194	1-216-864-11	SHORT CHIP	0 (K6800P)		
R1201	1-216-837-11	METAL CHIP	22K	5%	1/10W
R1251	1-216-840-11	METAL CHIP	39K	5%	1/10W
R1252	1-216-840-11	METAL CHIP	39K	5%	1/10W
R1260	1-216-821-11	METAL CHIP	1K	5%	1/10W
R1261	1-216-821-11	METAL CHIP	1K	5%	1/10W
R1301	1-216-830-11	METAL CHIP	5.6K	5%	1/10W
R1302	1-216-829-11	METAL CHIP	4.7K	5%	1/10W
R1303	1-216-839-11	METAL CHIP	33K	5%	1/10W
R1304	1-216-809-11	METAL CHIP	100	5%	1/10W
R1305	1-216-817-11	METAL CHIP	470	5%	1/10W
R1306	1-216-801-11	METAL CHIP	22	5%	1/10W
R1307	1-216-809-11	METAL CHIP	100	5%	1/10W
R1308	1-216-809-11	METAL CHIP	100	5%	1/10W
R1309	1-216-809-11	METAL CHIP	100	5%	1/10W
R1310	1-216-857-11	METAL CHIP	1M	5%	1/10W
R1311	1-216-809-11	METAL CHIP	100	5%	1/10W
R1312	1-216-809-11	METAL CHIP	100	5%	1/10W
R1313	1-216-809-11	METAL CHIP	100	5%	1/10W
R1314	1-216-833-11	METAL CHIP	10K	5%	1/10W
R1315	1-216-809-11	METAL CHIP	100	5%	1/10W
R1316	1-216-809-11	METAL CHIP	100	5%	1/10W
R1318	1-216-833-11	METAL CHIP	10K	5%	1/10W
R1351	1-216-809-11	METAL CHIP	100	5%	1/10W
R1354	1-216-809-11	METAL CHIP	100	5%	1/10W
R1355	1-218-285-11	METAL CHIP	75	5%	1/10W
R1356	1-216-821-11	METAL CHIP	1K	5%	1/10W
R1357	1-216-837-11	METAL CHIP	22K	5%	1/10W
R1358	1-216-854-11	METAL CHIP	560K	5%	1/10W
R1359	1-216-809-11	METAL CHIP	100	5%	1/10W
R1360	1-216-809-11	METAL CHIP	100	5%	1/10W
R1362	1-216-809-11	METAL CHIP	100	5%	1/10W
R1402	1-216-845-11	METAL CHIP	100K	5%	1/10W
R1403	1-216-809-11	METAL CHIP	100	5%	1/10W
R1404	1-216-845-11	METAL CHIP	100K	5%	1/10W
R1405	1-216-825-11	METAL CHIP	2.2K	5%	1/10W
R1406	1-216-821-11	METAL CHIP	1K	5%	1/10W
R1407	1-216-809-11	METAL CHIP	100	5%	1/10W
R1408	1-216-833-11	METAL CHIP	10K	5%	1/10W
R1409	1-216-841-11	METAL CHIP	47K	5%	1/10W
R1410	1-216-828-11	METAL CHIP	3.9K	5%	1/10W
R1411	1-216-828-11	METAL CHIP	3.9K	5%	1/10W
R1412	1-216-829-11	METAL CHIP	4.7K	5%	1/10W
R1413	1-216-812-11	METAL CHIP	180	5%	1/10W
R1414	1-216-812-11	METAL CHIP	180	5%	1/10W
R1415	1-216-829-11	METAL CHIP	4.7K	5%	1/10W
R1416	1-216-821-11	METAL CHIP	1K	5%	1/10W
R1420	1-216-829-11	METAL CHIP	4.7K	5%	1/10W
R1421	1-216-829-11	METAL CHIP	4.7K	5%	1/10W
R1422	1-216-829-11	METAL CHIP	4.7K	5%	1/10W
R1423	1-216-812-11	METAL CHIP	180	5%	1/10W
R1424	1-216-812-11	METAL CHIP	180	5%	1/10W
R1425	1-216-829-11	METAL CHIP	4.7K	5%	1/10W
R1426	1-216-821-11	METAL CHIP	1K	5%	1/10W
R1430	1-216-829-11	METAL CHIP	4.7K	5%	1/10W
R1431	1-216-829-11	METAL CHIP	4.7K	5%	1/10W
R1432	1-216-829-11	METAL CHIP	4.7K	5%	1/10W
R1433	1-216-812-11	METAL CHIP	180	5%	1/10W

DIGITAL DISPLAY

Ref. No.	Part No.	Description			Remark
R1434	1-216-812-11	METAL CHIP	180	5%	1/10W
R1435	1-216-829-11	METAL CHIP	4.7K	5%	1/10W
R1436	1-216-821-11	METAL CHIP	1K	5%	1/10W
R1440	1-216-829-11	METAL CHIP	4.7K	5%	1/10W
R1441	1-216-829-11	METAL CHIP	4.7K	5%	1/10W
R1442	1-216-829-11	METAL CHIP	4.7K	5%	1/10W
R1443	1-216-812-11	METAL CHIP	180	5%	1/10W
R1444	1-216-812-11	METAL CHIP	180	5%	1/10W
R1445	1-216-829-11	METAL CHIP	4.7K	5%	1/10W
R1446	1-216-821-11	METAL CHIP	1K	5%	1/10W
R1450	1-216-828-11	METAL CHIP	3.9K	5%	1/10W
R1451	1-216-828-11	METAL CHIP	3.9K	5%	1/10W
R1452	1-216-829-11	METAL CHIP	4.7K	5%	1/10W
R1453	1-216-812-11	METAL CHIP	180	5%	1/10W
R1454	1-216-812-11	METAL CHIP	180	5%	1/10W
R1455	1-216-829-11	METAL CHIP	4.7K	5%	1/10W
R1460	1-216-829-11	METAL CHIP	4.7K	5%	1/10W
R1461	1-216-829-11	METAL CHIP	4.7K	5%	1/10W
R1462	1-216-829-11	METAL CHIP	4.7K	5%	1/10W
R1463	1-216-812-11	METAL CHIP	180	5%	1/10W
R1464	1-216-812-11	METAL CHIP	180	5%	1/10W
R1465	1-216-829-11	METAL CHIP	4.7K	5%	1/10W
R1466	1-216-821-11	METAL CHIP	1K	5%	1/10W
R1470	1-216-829-11	METAL CHIP	4.7K	5%	1/10W
R1471	1-216-829-11	METAL CHIP	4.7K	5%	1/10W
R1472	1-216-829-11	METAL CHIP	4.7K	5%	1/10W
R1473	1-216-812-11	METAL CHIP	180	5%	1/10W
R1474	1-216-812-11	METAL CHIP	180	5%	1/10W
R1475	1-216-829-11	METAL CHIP	4.7K	5%	1/10W
R1476	1-216-821-11	METAL CHIP	1K	5%	1/10W
R1480	1-216-829-11	METAL CHIP	4.7K	5%	1/10W
R1481	1-216-829-11	METAL CHIP	4.7K	5%	1/10W
R1482	1-216-829-11	METAL CHIP	4.7K	5%	1/10W
R1483	1-216-812-11	METAL CHIP	180	5%	1/10W
R1484	1-216-812-11	METAL CHIP	180	5%	1/10W
R1485	1-216-829-11	METAL CHIP	4.7K	5%	1/10W
R1486	1-216-821-11	METAL CHIP	1K	5%	1/10W
R1492	1-216-845-11	METAL CHIP	100K	5%	1/10W
R1493	1-216-809-11	METAL CHIP	100	5%	1/10W
R1494	1-216-845-11	METAL CHIP	100K	5%	1/10W
R1501	1-216-809-11	METAL CHIP	100	5%	1/10W
R1502	1-216-809-11	METAL CHIP	100	5%	1/10W
R1503	1-216-813-11	METAL CHIP	220	5%	1/10W
R1504	1-216-809-11	METAL CHIP	100	5%	1/10W
R1505	1-216-809-11	METAL CHIP	100	5%	1/10W
R1506	1-216-809-11	METAL CHIP	100	5%	1/10W
R1507	1-216-809-11	METAL CHIP	100	5%	1/10W
R1508	1-216-809-11	METAL CHIP	100	5%	1/10W
R1509	1-216-809-11	METAL CHIP	100	5%	1/10W
R1510	1-216-809-11	METAL CHIP	100	5%	1/10W
R1511	1-216-809-11	METAL CHIP	100	5%	1/10W
R1512	1-216-821-11	METAL CHIP	1K	5%	1/10W
R1513	1-216-833-11	METAL CHIP	10K	5%	1/10W
R1514	1-216-833-11	METAL CHIP	10K	5%	1/10W
R1515	1-216-857-11	METAL CHIP	1M	5%	1/10W
R1517	1-216-813-11	METAL CHIP	220	5%	1/10W
R1518	1-216-813-11	METAL CHIP	220	5%	1/10W
R1519	1-216-813-11	METAL CHIP	220	5%	1/10W
R1520	1-216-813-11	METAL CHIP	220	5%	1/10W
R1521	1-216-813-11	METAL CHIP	220	5%	1/10W
R1522	1-216-813-11	METAL CHIP	220	5%	1/10W
R1523	1-216-813-11	METAL CHIP	220	5%	1/10W
R1525	1-216-813-11	METAL CHIP	220	5%	1/10W
R1526	1-216-813-11	METAL CHIP	220	5%	1/10W
R1527	1-216-813-11	METAL CHIP	220	5%	1/10W
R1528	1-216-813-11	METAL CHIP	220	5%	1/10W
R1532	1-216-813-11	METAL CHIP	220	5%	1/10W
R1533	1-216-813-11	METAL CHIP	220	5%	1/10W
R1534	1-216-813-11	METAL CHIP	220	5%	1/10W
R1535	1-216-813-11	METAL CHIP	220	5%	1/10W
R1536	1-216-813-11	METAL CHIP	220	5%	1/10W
R1537	1-216-813-11	METAL CHIP	220	5%	1/10W
R1538	1-216-813-11	METAL CHIP	220	5%	1/10W
R1539	1-216-813-11	METAL CHIP	220	5%	1/10W
R1540	1-216-813-11	METAL CHIP	220	5%	1/10W
R1541	1-216-813-11	METAL CHIP	220	5%	1/10W
R1542	1-216-813-11	METAL CHIP	220	5%	1/10W
R1543	1-216-813-11	METAL CHIP	220	5%	1/10W
R1544	1-216-813-11	METAL CHIP	220	5%	1/10W
R1545	1-216-813-11	METAL CHIP	220	5%	1/10W
R1546	1-216-813-11	METAL CHIP	220	5%	1/10W
R1547	1-216-813-11	METAL CHIP	220	5%	1/10W
R1548	1-216-813-11	METAL CHIP	220	5%	1/10W
R1549	1-216-813-11	METAL CHIP	220	5%	1/10W
R1550	1-216-813-11	METAL CHIP	220	5%	1/10W
R1551	1-216-813-11	METAL CHIP	220	5%	1/10W
R1552	1-216-813-11	METAL CHIP	220	5%	1/10W
R1553	1-216-813-11	METAL CHIP	220	5%	1/10W
R1554	1-216-813-11	METAL CHIP	220	5%	1/10W
R1555	1-216-813-11	METAL CHIP	220	5%	1/10W
R1556	1-216-809-11	METAL CHIP	100	5%	1/10W
R1570	1-216-833-11	METAL CHIP	10K	5%	1/10W
R1571	1-216-833-11	METAL CHIP	10K	5%	1/10W
R1572	1-216-833-11	METAL CHIP	10K	5%	1/10W
R1573	1-216-833-11	METAL CHIP	10K	5%	1/10W
R1574	1-216-833-11	METAL CHIP	10K	5%	1/10W
R1635	1-216-833-11	METAL CHIP	10K	5%	1/10W
R1636	1-216-833-11	METAL CHIP	10K	5%	1/10W

< VIBRATOR >

X1101	1-767-922-11	VIBRATOR, CERAMIC (16MHz)			
X1301	1-795-126-21	VIBRATOR, CRYSTAL (12.288MHz)			
X1502	1-579-993-21	VIBRATOR, CERAMIC (13.5MHz)			

****

A-4750-654-A DISPLAY BOARD, COMPLETE

****

< CAPACITOR >

C100	1-164-159-11	CERAMIC	0.1uF		50V
C101	1-164-159-11	CERAMIC	0.1uF		50V
C104	1-164-159-11	CERAMIC	0.1uF		50V
C105	1-126-795-11	ELECT	10uF	20%	50V
C108	1-164-159-11	CERAMIC	0.1uF		50V
C109	1-164-159-11	CERAMIC	0.1uF		50V
C110	1-128-825-11	CERAMIC	0.0022uF	5%	50V
C111	1-128-813-11	CERAMIC	220PF	5%	50V

DISPLAY

Ref. No.	Part No.	Description			Remark
C112	1-128-813-11	CERAMIC	220PF	5%	50V
C114	1-164-159-11	CERAMIC	0.1uF		50V
C115	1-126-795-11	ELECT	10uF	20%	50V
C132	1-128-813-11	CERAMIC	220PF	5%	50V
C133	1-128-813-11	CERAMIC	220PF	5%	50V
C134	1-128-813-11	CERAMIC	220PF	5%	50V
C135	1-128-813-11	CERAMIC	220PF	5%	50V
C136	1-128-813-11	CERAMIC	220PF	5%	50V
C137	1-128-813-11	CERAMIC	220PF	5%	50V
C138	1-128-813-11	CERAMIC	220PF	5%	50V
C139	1-128-813-11	CERAMIC	220PF	5%	50V
C140	1-128-813-11	CERAMIC	220PF	5%	50V
C141	1-128-813-11	CERAMIC	220PF	5%	50V
C142	1-128-813-11	CERAMIC	220PF	5%	50V
C143	1-128-813-11	CERAMIC	220PF	5%	50V
C144	1-164-159-11	CERAMIC	0.1uF		50V
C150	1-164-159-11	CERAMIC	0.1uF		50V
C151	1-126-795-11	ELECT	10uF	20%	50V
C152	1-128-813-11	CERAMIC	220PF	5%	50V
C153	1-128-813-11	CERAMIC	220PF	5%	50V
C154	1-128-813-11	CERAMIC	220PF	5%	50V
C155	1-164-159-11	CERAMIC	0.1uF		50V
C156	1-164-159-11	CERAMIC	0.1uF		50V
C157	1-164-159-11	CERAMIC	0.1uF		50V
		< CONNECTOR >			
* CNP101	1-564-518-11	PLUG, CONNECTOR 3P			
* CNP103	1-564-518-11	PLUG, CONNECTOR 3P			
CNS100	1-568-838-11	CONNECTOR, FFC 21P			
		< DIODE >			
D101	6-500-647-01	LED SEL5E20C-STP15 (MULTI CHANNEL DECODING)			
D102	8-719-061-96	LED SLR-325DCT31 (2CH)			
D103	8-719-061-96	LED SLR-325DCT31 (MUSIC)			
D104	8-719-061-96	LED SLR-325DCT31 (MOVIE)			
D105	8-719-061-96	LED SLR-325DCT31 (A.F.D.)			
		< VACUUM FLUORESCENT DISPLAY >			
FL101	1-518-966-11	VACUUM FLUORESCENT DISPLAY			
		< IC >			
IC100	8-759-643-83	IC uPD16315GB-3BS			
IC101	8-759-036-90	IC MC74ACT08N			
IC102	6-600-349-31	IC NJL24H400A (IR)			
		< TRANSISTOR >			
Q100	8-729-119-78	TRANSISTOR 2SC2785-HFE			
		< RESISTOR >			
R101	1-249-409-11	CARBON	220	5%	1/4W
R102	1-249-411-11	CARBON	330	5%	1/4W
R103	1-249-413-11	CARBON	470	5%	1/4W
R104	1-249-415-11	CARBON	680	5%	1/4W
R105	1-247-831-11	CARBON	1K	5%	1/4W
R106	1-249-419-11	CARBON	1.5K	5%	1/4W
R107	1-249-421-11	CARBON	2.2K	5%	1/4W
R108	1-247-847-11	CARBON	4.7K	5%	1/4W

Ref. No.	Part No.	Description			Remark
R109	1-249-429-11	CARBON	10K	5%	1/4W
R121	1-249-409-11	CARBON	220	5%	1/4W
R122	1-249-411-11	CARBON	330	5%	1/4W
R123	1-249-413-11	CARBON	470	5%	1/4W
R124	1-249-415-11	CARBON	680	5%	1/4W
R125	1-247-831-11	CARBON	1K	5%	1/4W
R126	1-249-419-11	CARBON	1.5K	5%	1/4W
R131	1-249-409-11	CARBON	220	5%	1/4W
R132	1-249-411-11	CARBON	330	5%	1/4W
R133	1-249-413-11	CARBON	470	5%	1/4W
R141	1-249-421-11	CARBON	2.2K	5%	1/4W
R150	1-249-440-11	CARBON	82K	5%	1/4W
R153	1-247-807-31	CARBON	100	5%	1/4W
R154	1-249-393-11	CARBON	10	5%	1/4W F
R160	1-247-804-11	CARBON	75	5%	1/4W
R161	1-249-409-11	CARBON	220	5%	1/4W
R162	1-249-429-11	CARBON	10K	5%	1/4W
R172	1-247-807-31	CARBON	100	5%	1/4W
R173	1-247-807-31	CARBON	100	5%	1/4W
R174	1-247-807-31	CARBON	100	5%	1/4W
R175	1-249-393-11	CARBON	10	5%	1/4W F
R198	1-249-381-11	CARBON	1	5%	1/4W F
R199	1-249-381-11	CARBON	1	5%	1/4W F
		< ROTARY ENCODER >			
RV102	1-418-725-41	ENCODER, ROTARY (12 TYPE) (MASTER VOLUME)			
		< SWITCH >			
S100	1-771-410-21	SWITCH, TACTILE (>)			
S101	1-771-410-21	SWITCH, TACTILE (INPUT MODE)			
S103	1-771-410-21	SWITCH, TACTILE (DVD)			
S105	1-771-410-21	SWITCH, TACTILE (MD/TAPE)			
S107	1-771-410-21	SWITCH, TACTILE (SA-CD/CD)			
S109	1-771-410-21	SWITCH, TACTILE (TUNER FM/AM)			
S110	1-771-410-21	SWITCH, TACTILE (MAIN MENU)			
S111	1-771-410-21	SWITCH, TACTILE (ENTER)			
S112	1-771-410-21	SWITCH, TACTILE (<)			
S113	1-771-410-21	SWITCH, TACTILE (+)			
S120	1-771-410-21	SWITCH, TACTILE (SURR BACK DECODING)			
S121	1-771-410-21	SWITCH, TACTILE (MUSIC)			
S122	1-771-410-21	SWITCH, TACTILE (MOVIE)			
S123	1-771-410-21	SWITCH, TACTILE (A.F.D.)			
S124	1-771-410-21	SWITCH, TACTILE (2CH)			
S125	1-771-410-21	SWITCH, TACTILE (MULTI CH IN)			
S130	1-771-410-21	SWITCH, TACTILE (–)			
S132	1-771-410-21	SWITCH, TACTILE (VIDEO 2)			
S134	1-771-410-21	SWITCH, TACTILE (VIDEO 1)			

****

HEADPHONE MAIN

Ref. No.	Part No.	Description			Remark
		HEADPHONE BOARD			
		**********			
		< CAPACITOR >			
C790	1-164-159-11	CERAMIC	0.1uF		50V
		< CONNECTOR >			
CNP791	1-691-766-11	PLUG (MICRO CONNECTOR) 4P			
		< JACK >			
J791	1-815-314-21	JACK (PHONES)			
**********					
	A-1054-392-A	MAIN BOARD, COMPLETE (DE597P)			
	A-4750-690-A	MAIN BOARD, COMPLETE (K6800P)			
		**********			
	7-685-646-79	SCREW +BVTP 3X8 TYPE2 IT-3			
		< CAPACITOR >			
C300	1-161-494-00	CERAMIC	0.022uF		25V
C310	1-161-494-00	CERAMIC	0.022uF		25V
C320	1-161-494-00	CERAMIC	0.022uF		25V
C330	1-161-494-00	CERAMIC	0.022uF		25V
C340	1-161-494-00	CERAMIC	0.022uF		25V
C350	1-161-494-00	CERAMIC	0.022uF		25V
C360	1-161-494-00	CERAMIC	0.022uF		25V
C400	1-164-159-11	CERAMIC	0.1uF		50V
C403	1-164-159-11	CERAMIC	0.1uF		50V
C408	1-126-963-11	ELECT	4.7uF	20%	50V
C409	1-126-963-11	ELECT	4.7uF	20%	50V
C444	1-128-825-11	CERAMIC	0.0022uF	5%	50V
C445	1-128-825-11	CERAMIC	0.0022uF	5%	50V
C458	1-126-963-11	ELECT	4.7uF	20%	50V
C459	1-126-963-11	ELECT	4.7uF	20%	50V
C464	1-164-159-11	CERAMIC	0.1uF		50V
C466	1-126-923-11	ELECT	220uF	20%	10V
C467	1-164-159-11	CERAMIC	0.1uF		50V
C468	1-128-809-11	CERAMIC	100PF	5%	50V
C469	1-128-809-11	CERAMIC	100PF	5%	50V
C470	1-128-809-11	CERAMIC	100PF	5%	50V
C471	1-126-963-11	ELECT	4.7uF	20%	50V
C472	1-126-963-11	ELECT	4.7uF	20%	50V
C481	1-126-963-11	ELECT	4.7uF	20%	50V
C482	1-126-963-11	ELECT	4.7uF	20%	50V
C483	1-126-963-11	ELECT	4.7uF	20%	50V
C484	1-126-963-11	ELECT	4.7uF	20%	50V
C485	1-126-963-11	ELECT	4.7uF	20%	50V
C486	1-126-963-11	ELECT	4.7uF	20%	50V
C488	1-164-159-11	CERAMIC	0.1uF		50V
C489	1-126-963-11	ELECT	4.7uF	20%	50V
C490	1-126-963-11	ELECT	4.7uF	20%	50V
C491	1-126-963-11	ELECT	4.7uF	20%	50V
C492	1-126-963-11	ELECT	4.7uF	20%	50V
C493	1-126-963-11	ELECT	4.7uF	20%	50V
C494	1-126-963-11	ELECT	4.7uF	20%	50V
C495	1-126-963-11	ELECT	4.7uF	20%	50V
C496	1-126-963-11	ELECT	4.7uF	20%	50V

Ref. No.	Part No.	Description			Remark
C499	1-162-211-31	CERAMIC	33PF	5%	50V
C501	1-126-963-11	ELECT	4.7uF	20%	50V
C503	1-104-658-11	ELECT	100uF	20%	10V
C504	1-107-583-11	CERAMIC	3PF	0.25PF	500V
C505	1-102-978-00	CERAMIC	220PF	5%	50V
C506	1-107-616-11	CERAMIC	150PF	5%	500V
C507	1-128-809-11	CERAMIC	100PF	5%	50V
C510	1-126-947-11	ELECT	47uF	20%	35V
C511	1-136-157-00	FILM	0.022uF	5%	50V
C516	1-162-815-11	CERAMIC	47PF	5%	500V
C517	1-162-815-11	CERAMIC	47PF	5%	500V
C519	1-128-813-11	CERAMIC	220PF	5%	50V
C540	1-126-964-11	ELECT	10uF	20%	50V
C541	1-127-876-11	CERAMIC	0.01uF	10%	50V
C601	1-126-963-11	ELECT	4.7uF	20%	50V
C603	1-104-658-11	ELECT	100uF	20%	10V
C604	1-107-583-11	CERAMIC	3PF	0.25PF	500V
C605	1-102-233-00	CERAMIC	33PF	10%	500V
C606	1-128-809-11	CERAMIC	100PF	5%	50V
C607	1-128-809-11	CERAMIC	100PF	5%	50V
C610	1-126-947-11	ELECT	47uF	20%	35V
C611	1-136-157-00	FILM	0.022uF	5%	50V
C619	1-128-813-11	CERAMIC	220PF	5%	50V
C620	1-162-815-11	CERAMIC	47PF	5%	500V
C621	1-162-815-11	CERAMIC	47PF	5%	500V
C640	1-126-964-11	ELECT	10uF	20%	50V
C642	1-127-876-11	CERAMIC	0.01uF	10%	50V
C651	1-126-963-11	ELECT	4.7uF	20%	50V
C653	1-104-658-11	ELECT	100uF	20%	10V
C654	1-107-583-11	CERAMIC	3PF	0.25PF	500V
C655	1-102-233-00	CERAMIC	33PF	10%	500V
C656	1-128-809-11	CERAMIC	100PF	5%	50V
C657	1-128-809-11	CERAMIC	100PF	5%	50V
C660	1-126-947-11	ELECT	47uF	20%	35V
C661	1-136-157-00	FILM	0.022uF	5%	50V
C666	1-162-815-11	CERAMIC	47PF	5%	500V
C669	1-162-815-11	CERAMIC	47PF	5%	500V
C670	1-128-813-11	CERAMIC	220PF	5%	50V
C680	1-126-964-11	ELECT	10uF	20%	50V
C681	1-127-876-11	CERAMIC	0.01uF	10%	50V
C691	1-164-159-11	CERAMIC	0.1uF		50V
C701	1-126-963-11	ELECT	4.7uF	20%	50V
C703	1-104-658-11	ELECT	100uF	20%	10V
C704	1-107-583-11	CERAMIC	3PF	0.25PF	500V
C705	1-102-233-00	CERAMIC	33PF	10%	500V
C706	1-128-809-11	CERAMIC	100PF	5%	50V
C707	1-128-809-11	CERAMIC	100PF	5%	50V
C710	1-126-947-11	ELECT	47uF	20%	35V
C711	1-136-157-00	FILM	0.022uF	5%	50V
C716	1-162-815-11	CERAMIC	47PF	5%	500V
C717	1-162-815-11	CERAMIC	47PF	5%	500V
C720	1-128-813-11	CERAMIC	220PF	5%	50V
C721	1-126-923-11	ELECT	220uF	20%	10V
C722	1-126-964-11	ELECT	10uF	20%	50V
C732	1-128-582-11	ELECT	10uF	20%	100V
C733	1-128-582-11	ELECT	10uF	20%	100V
C740	1-126-964-11	ELECT	10uF	20%	50V
C742	1-127-876-11	CERAMIC	0.01uF	10%	50V

Ref. No.	Part No.	Description			Remark
C743	1-128-579-11	ELECT	2.2uF	20%	100V
C744	1-128-579-11	ELECT	2.2uF	20%	100V
C750	1-126-964-11	ELECT	10uF	20%	50V
C751	1-126-963-11	ELECT	4.7uF	20%	50V
C752	1-127-876-11	CERAMIC	0.01uF	10%	50V
C753	1-104-658-11	ELECT	100uF	20%	10V
C754	1-107-583-11	CERAMIC	3PF	0.25PF	500V
C755	1-102-233-00	CERAMIC	33PF	10%	500V
C756	1-128-809-11	CERAMIC	100PF	5%	50V
C757	1-128-809-11	CERAMIC	100PF	5%	50V
C760	1-126-947-11	ELECT	47uF	20%	35V
C761	1-136-157-00	FILM	0.022uF	5%	50V
C766	1-162-815-11	CERAMIC	47PF	5%	500V
C767	1-162-815-11	CERAMIC	47PF	5%	500V
C770	1-128-813-11	CERAMIC	220PF	5%	50V
C801	1-126-947-11	ELECT	47uF	20%	35V
C802	1-126-947-11	ELECT	47uF	20%	35V
C803	1-165-707-11	ELECT	10000uF	20%	71V (DE597P)
C803	1-165-946-11	ELECT	6800uF	20%	71V (K6800P)
C804	1-165-707-11	ELECT	10000uF	20%	71V (DE597P)
C804	1-165-946-11	ELECT	6800uF	20%	71V (K6800P)
C805	1-135-851-21	MYLAR	0.22uF		100V
C806	1-135-851-21	MYLAR	0.22uF		100V
C807	1-126-947-11	ELECT	47uF	20%	35V
C808	1-126-947-11	ELECT	47uF	20%	35V
C809	1-164-159-11	CERAMIC	0.1uF		50V
C810	1-164-159-11	CERAMIC	0.1uF		50V
C811	1-164-159-11	CERAMIC	0.1uF		50V
C822	1-126-947-11	ELECT	47uF	20%	35V
C830	1-164-159-11	CERAMIC	0.1uF		50V
C831	1-164-159-11	CERAMIC	0.1uF		50V
C832	1-126-936-11	ELECT	3300uF	20%	16V
CC02	1-128-809-11	CERAMIC	100PF	5%	50V (DE597P)
CC04	1-128-809-11	CERAMIC	100PF	5%	50V (DE597P)
CC05	1-128-809-11	CERAMIC	100PF	5%	50V (DE597P)
CC06	1-128-809-11	CERAMIC	100PF	5%	50V (DE597P)
CC07	1-128-809-11	CERAMIC	100PF	5%	50V (DE597P)
CC08	1-128-809-11	CERAMIC	100PF	5%	50V (DE597P)
CC09	1-128-809-11	CERAMIC	100PF	5%	50V (DE597P)
CC11	1-127-876-11	CERAMIC	0.01uF	10%	50V (DE597P)
CC13	1-127-876-11	CERAMIC	0.01uF	10%	50V (DE597P)
CC15	1-127-876-11	CERAMIC	0.01uF	10%	50V (DE597P)
CC17	1-127-876-11	CERAMIC	0.01uF	10%	50V (DE597P)
CC19	1-127-876-11	CERAMIC	0.01uF	10%	50V (DE597P)
CC21	1-127-876-11	CERAMIC	0.01uF	10%	50V (DE597P)
CC31	1-128-813-11	CERAMIC	220PF	5%	50V (DE597P)
CC32	1-128-813-11	CERAMIC	220PF	5%	50V (DE597P)
CC33	1-128-813-11	CERAMIC	220PF	5%	50V (DE597P)
CC34	1-128-813-11	CERAMIC	220PF	5%	50V (DE597P)
CC35	1-128-813-11	CERAMIC	220PF	5%	50V (DE597P)
CC36	1-128-813-11	CERAMIC	220PF	5%	50V (DE597P)
CC52	1-128-809-11	CERAMIC	100PF	5%	50V (DE597P)
CC54	1-128-809-11	CERAMIC	100PF	5%	50V (DE597P)
CC55	1-128-809-11	CERAMIC	100PF	5%	50V (DE597P)
CC56	1-128-809-11	CERAMIC	100PF	5%	50V (DE597P)
CC57	1-128-809-11	CERAMIC	100PF	5%	50V (DE597P)
CC58	1-128-809-11	CERAMIC	100PF	5%	50V (DE597P)
CC59	1-128-809-11	CERAMIC	100PF	5%	50V (DE597P)
		< CONNECTOR >			
CNP500	1-766-715-21	CONNECTOR, BOARD TO BOARD 10P			
* CNP501	1-766-718-21	CONNECTOR, BOARD TO BOARD 17P			
CNP802	1-691-767-11	PLUG (MICRO CONNECTOR) 5P			
CNP911	1-784-926-11	PIN, CONNECTOR 11P			
CNP912	1-784-921-11	PIN, CONNECTOR 4P			
CNP913	1-779-978-11	PIN, CONNECTOR 3P			
CNP915	1-766-200-11	SOCKET, CONNECTOR PIN 5P			
		< DIODE >			
D505	8-719-991-33	DIODE 1SS133T-77			
D540	8-719-991-33	DIODE 1SS133T-77			
D560	8-719-991-33	DIODE 1SS133T-77			
D605	8-719-991-33	DIODE 1SS133T-77			
D610	8-719-991-33	DIODE 1SS133T-77			
D611	8-719-991-33	DIODE 1SS133T-77			
D640	8-719-991-33	DIODE 1SS133T-77			
D665	8-719-991-33	DIODE 1SS133T-77			
D680	8-719-991-33	DIODE 1SS133T-77			
D690	8-719-934-21	DIODE HZS30-1L			
D691	8-719-991-33	DIODE 1SS133T-77			
D705	8-719-991-33	DIODE 1SS133T-77			
D710	8-719-991-33	DIODE 1SS133T-77			
D721	8-719-991-33	DIODE 1SS133T-77			
D722	8-719-991-33	DIODE 1SS133T-77			
D732	8-719-991-33	DIODE 1SS133T-77			
D740	8-719-991-33	DIODE 1SS133T-77			
D750	8-719-991-33	DIODE 1SS133T-77			
D765	8-719-991-33	DIODE 1SS133T-77			
D791	8-719-991-33	DIODE 1SS133T-77			
D801	8-719-933-95	DIODE HZS20-1L			

MAIN

Ref. No.	Part No.	Description	Remark
D802	8-719-072-05	DIODE RBV-602LF-A	
D804	8-719-068-28	DIODE HZ6.8BP-TK	
D805	6-500-522-11	DIODE 10EDB40-TA2B5	
D806	6-500-522-11	DIODE 10EDB40-TA2B5	
D807	6-500-522-11	DIODE 10EDB40-TA2B5	
D808	6-500-522-11	DIODE 10EDB40-TA2B5	
D896	8-719-043-76	DIODE AK04V0	
		< IC >	
IC401	6-703-500-01	IC M61532FP	
IC402	8-759-167-88	IC NJM4565D	
IC501	8-749-011-16	IC STK350-230	
IC601	6-700-943-01	IC uPC2581V-S	
IC691	8-759-167-88	IC NJM4565D	
IC701	6-700-943-01	IC uPC2581V-S	
IC801	8-759-071-48	IC TA7807S	
IC802	8-759-071-47	IC TA79007S	
		< JACK >	
J309	1-770-377-21	JACK, PIN 1P (SUB WOOFER AUDIO OUT)	
J401	1-793-775-12	JACK, PIN 6P (MULTI CH IN FRONT,SURROUND,CENTER,SUB WOOFER)	
J402	1-770-614-11	JACK, PIN 4P (SA-CD/CD IN,MD/TAPE OUT)	
J403	1-770-614-11	JACK, PIN 4P (MD/TAPE IN,DVD AUDIO IN)	
J404	1-774-411-11	JACK, PIN 6P (VIDEO 2 AUDIO IN, VIDEO 1 AUDIO OUT/IN)	
		< COIL >	
L601	1-420-872-52	COIL, AIR-CORE	
L651	1-420-872-52	COIL, AIR-CORE	
L701	1-420-872-52	COIL, AIR-CORE	
L751	1-420-872-52	COIL, AIR-CORE	
		< TRANSISTOR >	
Q300	8-729-823-22	TRANSISTOR 2SC3576	
Q310	8-729-823-22	TRANSISTOR 2SC3576	
Q320	8-729-823-22	TRANSISTOR 2SC3576	
Q330	8-729-823-22	TRANSISTOR 2SC3576	
Q340	8-729-823-22	TRANSISTOR 2SC3576	
Q350	8-729-823-22	TRANSISTOR 2SC3576	
Q360	8-729-823-22	TRANSISTOR 2SC3576	
Q379	8-729-900-63	TRANSISTOR DTA124ES	
Q471	8-729-823-22	TRANSISTOR 2SC3576	
Q501	8-729-119-76	TRANSISTOR 2SA1175-HFE	
Q502	8-729-141-30	TRANSISTOR 2SC3623A-LK	
Q505	8-729-140-82	TRANSISTOR 2SA988-PAFAEA	
Q506	8-729-140-82	TRANSISTOR 2SA988-PAFAEA	
Q540	8-729-281-53	TRANSISTOR 2SC1815-GR	
Q560	8-729-119-79	TRANSISTOR 2SC2785-FEK	
Q601	8-729-119-76	TRANSISTOR 2SA1175-HFE	
Q602	8-729-141-30	TRANSISTOR 2SC3623A-LK	
Q605	8-729-140-82	TRANSISTOR 2SA988-PAFAEA	
Q606	8-729-140-82	TRANSISTOR 2SA988-PAFAEA	
Q610	8-729-119-79	TRANSISTOR 2SC2785-FEK	
Q611	8-729-119-79	TRANSISTOR 2SC2785-FEK	
Q640	8-729-281-53	TRANSISTOR 2SC1815-GR	
Q651	8-729-119-76	TRANSISTOR 2SA1175-HFE	
Q652	8-729-141-30	TRANSISTOR 2SC3623A-LK	
Q655	8-729-140-82	TRANSISTOR 2SA988-PAFAEA	
Q656	8-729-140-82	TRANSISTOR 2SA988-PAFAEA	
Q680	8-729-281-53	TRANSISTOR 2SC1815-GR	
Q691	8-729-281-53	TRANSISTOR 2SC1815-GR	
Q692	8-729-900-63	TRANSISTOR DTA124ES	
Q701	8-729-119-76	TRANSISTOR 2SA1175-HFE	
Q702	8-729-141-30	TRANSISTOR 2SC3623A-LK	
Q705	8-729-140-82	TRANSISTOR 2SA988-PAFAEA	
Q706	8-729-140-82	TRANSISTOR 2SA988-PAFAEA	
Q710	8-729-119-79	TRANSISTOR 2SC2785-FEK	
Q722	8-729-140-84	TRANSISTOR 2SC1841-PAFAEA	
Q723	8-729-119-79	TRANSISTOR 2SC2785-FEK	
Q725	8-729-140-82	TRANSISTOR 2SA988-PAFAEA	
Q740	8-729-281-53	TRANSISTOR 2SC1815-GR	
Q750	8-729-281-53	TRANSISTOR 2SC1815-GR	
Q751	8-729-119-76	TRANSISTOR 2SA1175-HFE	
Q752	8-729-141-30	TRANSISTOR 2SC3623A-LK	
Q755	8-729-140-82	TRANSISTOR 2SA988-PAFAEA	
Q756	8-729-140-82	TRANSISTOR 2SA988-PAFAEA	
Q790	8-729-119-79	TRANSISTOR 2SC2785-FEK	
Q801	8-729-140-97	TRANSISTOR 2SB734-34	
		< RESISTOR >	
R300	1-247-831-11	CARBON 1K 5% 1/4W	
R301	1-247-879-11	CARBON 100K 5% 1/4W	
R302	1-247-847-11	CARBON 4.7K 5% 1/4W	
R310	1-247-831-11	CARBON 1K 5% 1/4W	
R311	1-247-879-11	CARBON 100K 5% 1/4W	
R312	1-247-847-11	CARBON 4.7K 5% 1/4W	
R320	1-247-831-11	CARBON 1K 5% 1/4W	
R321	1-247-879-11	CARBON 100K 5% 1/4W	
R322	1-247-847-11	CARBON 4.7K 5% 1/4W	
R330	1-247-831-11	CARBON 1K 5% 1/4W	
R331	1-247-879-11	CARBON 100K 5% 1/4W	
R332	1-247-847-11	CARBON 4.7K 5% 1/4W	
R340	1-247-831-11	CARBON 1K 5% 1/4W	
R341	1-247-879-11	CARBON 100K 5% 1/4W	
R342	1-247-847-11	CARBON 4.7K 5% 1/4W	
R350	1-247-831-11	CARBON 1K 5% 1/4W	
R351	1-247-879-11	CARBON 100K 5% 1/4W	
R352	1-247-847-11	CARBON 4.7K 5% 1/4W	
R360	1-247-831-11	CARBON 1K 5% 1/4W	
R361	1-247-879-11	CARBON 100K 5% 1/4W	
R362	1-247-847-11	CARBON 4.7K 5% 1/4W	
R380	1-247-879-11	CARBON 100K 5% 1/4W	
R381	1-249-429-11	CARBON 10K 5% 1/4W	
R402	1-247-831-11	CARBON 1K 5% 1/4W	
R404	1-247-831-11	CARBON 1K 5% 1/4W	
R405	1-247-831-11	CARBON 1K 5% 1/4W	
R406	1-247-831-11	CARBON 1K 5% 1/4W	
R407	1-247-831-11	CARBON 1K 5% 1/4W	
R408	1-247-831-11	CARBON 1K 5% 1/4W	
R409	1-247-831-11	CARBON 1K 5% 1/4W	
R428	1-247-831-11	CARBON 1K 5% 1/4W	
R429	1-247-831-11	CARBON 1K 5% 1/4W	
R430	1-247-831-11	CARBON 1K 5% 1/4W	
R431	1-247-831-11	CARBON 1K 5% 1/4W	
R432	1-247-831-11	CARBON 1K 5% 1/4W	
R433	1-247-831-11	CARBON 1K 5% 1/4W	

Ref. No.	Part No.	Description			Remark
R434	1-247-831-11	CARBON	1K	5%	1/4W
R435	1-247-831-11	CARBON	1K	5%	1/4W
R436	1-247-831-11	CARBON	1K	5%	1/4W
R452	1-247-831-11	CARBON	1K	5%	1/4W
R454	1-247-831-11	CARBON	1K	5%	1/4W
R455	1-247-831-11	CARBON	1K	5%	1/4W
R456	1-247-831-11	CARBON	1K	5%	1/4W
R457	1-247-831-11	CARBON	1K	5%	1/4W
R458	1-247-831-11	CARBON	1K	5%	1/4W
R459	1-247-831-11	CARBON	1K	5%	1/4W
R469	1-247-831-11	CARBON	1K	5%	1/4W
R470	1-247-871-11	CARBON	47K	5%	1/4W
R471	1-247-831-11	CARBON	1K	5%	1/4W
R472	1-249-415-11	CARBON	680	5%	1/4W
R473	1-249-429-11	CARBON	10K	5%	1/4W
R474	1-249-429-11	CARBON	10K	5%	1/4W
R475	1-249-421-11	CARBON	2.2K	5%	1/4W
R480	1-247-871-11	CARBON	47K	5%	1/4W
R499	1-247-871-11	CARBON	47K	5%	1/4W
R501	1-247-831-11	CARBON	1K	5%	1/4W
R502	1-249-439-11	CARBON	68K	5%	1/4W
R503	1-249-422-11	CARBON	2.7K	5%	1/4W
R504	1-249-411-11	CARBON	330	5%	1/4W
R505	1-249-439-11	CARBON	68K	5%	1/4W
R510	1-249-421-11	CARBON	2.2K	5%	1/4W
R511	1-249-440-11	CARBON	82K	5%	1/4W
R513	1-249-414-11	CARBON	560	5%	1/4W
R514	1-249-399-11	CARBON	33	5%	1/4W F
R515	1-249-399-11	CARBON	33	5%	1/4W F
R516	1-234-182-11	ENCAPSULATED COMPONENT 0.22X2 5W			
R517	1-249-393-11	CARBON	10	5%	1/4W F
R520	1-247-847-11	CARBON	4.7K	5%	1/4W
R521	1-240-855-81	CARBON	6.2K	5%	1/4W F
R522	1-249-419-11	CARBON	1.5K	5%	1/4W
R524	1-249-431-11	CARBON	15K	5%	1/4W
R525	1-249-439-11	CARBON	68K	5%	1/4W
R532	1-247-847-11	CARBON	4.7K	5%	1/4W
R533	1-247-871-11	CARBON	47K	5%	1/4W
R540	1-247-863-11	CARBON	22K	5%	1/4W
R546	1-249-431-11	CARBON	15K	5%	1/4W
R555	1-247-847-11	CARBON	4.7K	5%	1/4W
R556	1-247-871-11	CARBON	47K	5%	1/4W
R557	1-249-431-11	CARBON	15K	5%	1/4W
R573	1-247-871-11	CARBON	47K	5%	1/4W
R601	1-247-831-11	CARBON	1K	5%	1/4W
R602	1-249-439-11	CARBON	68K	5%	1/4W
R603	1-249-422-11	CARBON	2.7K	5%	1/4W
R604	1-249-439-11	CARBON	68K	5%	1/4W
R610	1-249-421-11	CARBON	2.2K	5%	1/4W
R611	1-249-440-11	CARBON	82K	5%	1/4W
R613	1-249-414-11	CARBON	560	5%	1/4W
R614	1-249-399-11	CARBON	33	5%	1/4W F
R615	1-249-399-11	CARBON	33	5%	1/4W F
R616	1-234-182-11	ENCAPSULATED COMPONENT 0.22X2 5W			
R617	1-249-393-11	CARBON	10	5%	1/4W F
R618	1-249-389-11	CARBON	4.7	5%	1/4W F
R620	1-247-847-11	CARBON	4.7K	5%	1/4W
R621	1-240-855-81	CARBON	6.2K	5%	1/4W F

Ref. No.	Part No.	Description			Remark
R622	1-249-419-11	CARBON	1.5K	5%	1/4W
R623	1-247-871-11	CARBON	47K	5%	1/4W
R624	1-249-431-11	CARBON	15K	5%	1/4W
R625	1-249-439-11	CARBON	68K	5%	1/4W
R631	1-247-847-11	CARBON	4.7K	5%	1/4W
R632	1-247-847-11	CARBON	4.7K	5%	1/4W
R634	1-249-404-00	CARBON	82	5%	1/4W F
R635	1-249-404-00	CARBON	82	5%	1/4W F
R638	1-249-439-11	CARBON	68K	5%	1/4W
R640	1-247-863-11	CARBON	22K	5%	1/4W
R648	1-249-431-11	CARBON	15K	5%	1/4W
R651	1-247-831-11	CARBON	1K	5%	1/4W
R652	1-249-439-11	CARBON	68K	5%	1/4W
R653	1-249-422-11	CARBON	2.7K	5%	1/4W
R654	1-249-439-11	CARBON	68K	5%	1/4W
R655	1-247-847-11	CARBON	4.7K	5%	1/4W
R656	1-247-871-11	CARBON	47K	5%	1/4W
R657	1-249-431-11	CARBON	15K	5%	1/4W
R660	1-249-421-11	CARBON	2.2K	5%	1/4W
R661	1-249-440-11	CARBON	82K	5%	1/4W
R663	1-249-414-11	CARBON	560	5%	1/4W
R664	1-249-399-11	CARBON	33	5%	1/4W F
R665	1-249-399-11	CARBON	33	5%	1/4W F
R666	1-234-182-11	ENCAPSULATED COMPONENT 0.22X2 5W			
R667	1-249-393-11	CARBON	10	5%	1/4W F
R668	1-249-389-11	CARBON	4.7	5%	1/4W F
R669	1-247-847-11	CARBON	4.7K	5%	1/4W
R671	1-240-855-81	CARBON	6.2K	5%	1/4W F
R672	1-249-419-11	CARBON	1.5K	5%	1/4W
R673	1-247-871-11	CARBON	47K	5%	1/4W
R674	1-249-431-11	CARBON	15K	5%	1/4W
R675	1-247-847-11	CARBON	4.7K	5%	1/4W
R676	1-247-871-11	CARBON	47K	5%	1/4W
R677	1-249-431-11	CARBON	15K	5%	1/4W
R680	1-247-863-11	CARBON	22K	5%	1/4W
R681	1-249-431-11	CARBON	15K	5%	1/4W
R690	1-247-887-00	CARBON	220K	5%	1/4W
⚠R691	1-216-453-00	METAL OXIDE	270	5%	2W F
⚠R692	1-216-453-00	METAL OXIDE	270	5%	2W F
R693	1-249-429-11	CARBON	10K	5%	1/4W
R694	1-249-429-11	CARBON	10K	5%	1/4W
R695	1-249-429-11	CARBON	10K	5%	1/4W
R696	1-247-871-11	CARBON	47K	5%	1/4W
R698	1-249-429-11	CARBON	10K	5%	1/4W
R699	1-247-895-00	CARBON	470K	5%	1/4W
R701	1-247-831-11	CARBON	1K	5%	1/4W
R702	1-249-439-11	CARBON	68K	5%	1/4W
R703	1-249-422-11	CARBON	2.7K	5%	1/4W
R704	1-249-439-11	CARBON	68K	5%	1/4W
R710	1-249-421-11	CARBON	2.2K	5%	1/4W
R711	1-249-440-11	CARBON	82K	5%	1/4W
R713	1-249-414-11	CARBON	560	5%	1/4W
R714	1-249-399-11	CARBON	33	5%	1/4W F
R715	1-249-399-11	CARBON	33	5%	1/4W F
R716	1-234-182-11	ENCAPSULATED COMPONENT 0.22X2 5W			
R717	1-249-393-11	CARBON	10	5%	1/4W F
R718	1-249-389-11	CARBON	4.7	5%	1/4W F
R719	1-247-847-11	CARBON	4.7K	5%	1/4W

The components identified by mark ⚠ or dotted line with mark ⚠ are critical for safety.
Replace only with part number specified.

MAIN POWER SB AMP

Ref. No.	Part No.	Description			Remark
R721	1-240-855-81	CARBON	6.2K	5%	1/4W F
R722	1-249-419-11	CARBON	1.5K	5%	1/4W
R723	1-247-871-11	CARBON	47K	5%	1/4W
R724	1-249-431-11	CARBON	15K	5%	1/4W
R725	1-249-439-11	CARBON	68K	5%	1/4W
R731	1-247-847-11	CARBON	4.7K	5%	1/4W
R732	1-249-381-11	CARBON	1	5%	1/4W F
R733	1-249-381-11	CARBON	1	5%	1/4W F
R734	1-249-404-00	CARBON	82	5%	1/4W F
R735	1-249-427-11	CARBON	6.8K	5%	1/4W
R736	1-247-831-11	CARBON	1K	5%	1/4W
R737	1-249-436-11	CARBON	39K	5%	1/4W
R740	1-247-863-11	CARBON	22K	5%	1/4W
R743	1-247-863-11	CARBON	22K	5%	1/4W
R744	1-247-863-11	CARBON	22K	5%	1/4W
R745	1-247-847-11	CARBON	4.7K	5%	1/4W
R746	1-247-871-11	CARBON	47K	5%	1/4W
R747	1-249-431-11	CARBON	15K	5%	1/4W
R748	1-249-431-11	CARBON	15K	5%	1/4W
R750	1-247-863-11	CARBON	22K	5%	1/4W
R751	1-247-831-11	CARBON	1K	5%	1/4W
R752	1-249-439-11	CARBON	68K	5%	1/4W
R753	1-249-422-11	CARBON	2.7K	5%	1/4W
R754	1-249-439-11	CARBON	68K	5%	1/4W
R755	1-247-847-11	CARBON	4.7K	5%	1/4W
R756	1-247-871-11	CARBON	47K	5%	1/4W
R757	1-249-431-11	CARBON	15K	5%	1/4W
R758	1-249-431-11	CARBON	15K	5%	1/4W
R760	1-249-421-11	CARBON	2.2K	5%	1/4W
R761	1-249-440-11	CARBON	82K	5%	1/4W
R763	1-249-414-11	CARBON	560	5%	1/4W
R764	1-249-399-11	CARBON	33	5%	1/4W F
R765	1-249-399-11	CARBON	33	5%	1/4W F
R766	1-234-182-11	ENCAPSULATED COMPONENT 0.22X2 5W			
R767	1-249-393-11	CARBON	10	5%	1/4W F
R768	1-249-389-11	CARBON	4.7	5%	1/4W F
R769	1-247-847-11	CARBON	4.7K	5%	1/4W
R770	1-247-871-11	CARBON	47K	5%	1/4W
R771	1-240-855-81	CARBON	6.2K	5%	1/4W F
R772	1-249-419-11	CARBON	1.5K	5%	1/4W
R773	1-247-871-11	CARBON	47K	5%	1/4W
R775	1-249-439-11	CARBON	68K	5%	1/4W
R778	1-249-431-11	CARBON	15K	5%	1/4W
R780	1-249-429-11	CARBON	10K	5%	1/4W
R791	1-247-847-11	CARBON	4.7K	5%	1/4W
⚠R792	1-215-868-00	METAL OXIDE	680	5%	1W F
R793	1-249-404-00	CARBON	82	5%	1/4W F
⚠R794	1-215-868-00	METAL OXIDE	680	5%	1W F
R802	1-249-404-00	CARBON	82	5%	1/4W F
R803	1-249-389-11	CARBON	4.7	5%	1/4W F
R804	1-249-429-11	CARBON	10K	5%	1/4W
R806	1-247-863-11	CARBON	22K	5%	1/4W
⚠R910	1-240-877-11	FUSIBLE	0.15	5%	1/2W F
RR11	1-249-393-11	CARBON	10	5%	1/4W F (DE597P)
RR12	1-249-393-11	CARBON	10	5%	1/4W F (DE597P)
RR13	1-249-393-11	CARBON	10	5%	1/4W F (DE597P)
RR14	1-249-393-11	CARBON	10	5%	1/4W F (DE597P)
RR15	1-249-393-11	CARBON	10	5%	1/4W F (DE597P)
RR16	1-249-393-11	CARBON	10	5%	1/4W F (DE597P)
		< RELAY >			
RY560	1-755-267-11	RELAY			
RY601	1-755-421-11	RELAY			
RY602	1-755-421-11	RELAY			
RY701	1-755-421-11	RELAY			
RY791	1-755-421-11	RELAY			
		< TERMINAL BOARD >			
TM601	1-694-935-12	TERMINAL BOARD (8P) (SPEAKERS FRONT A,SURROUND)			
TM602	1-694-785-11	TERMINAL BOARD (4P) (SPEAKERS FRONT B)			

****

	1-861-057-11	POWER BOARD			
		**********			
		< RESISTOR >			
R127	1-249-421-11	CARBON	2.2K	5%	1/4W
R128	1-247-847-11	CARBON	4.7K	5%	1/4W
		< SWITCH >			
S126	1-771-410-21	SWITCH, TACTILE (SPEAKERS (OFF/A/B/A+B))			
S127	1-771-410-21	SWITCH, TACTILE (DISPLAY)			
S128	1-771-410-21	SWITCH, TACTILE (DIMMER)			
S152	1-771-410-21	SWITCH, TACTILE (I/⏻)			

****

	A-1054-382-A	SB AMP BOARD, COMPLETE			
		**********			
		< CAPACITOR >			
C561	1-126-963-11	ELECT	4.7uF	20%	50V
C562	1-128-809-11	CERAMIC	100PF	5%	50V
C563	1-102-978-00	CERAMIC	220PF	5%	50V
C564	1-107-616-11	CERAMIC	150PF	5%	500V
C565	1-107-583-11	CERAMIC	3PF	0.25PF	500V
C566	1-104-658-11	ELECT	100uF	20%	10V
C571	1-126-947-11	ELECT	47uF	20%	35V
C573	1-162-815-11	CERAMIC	47PF	5%	500V
C575	1-162-815-11	CERAMIC	47PF	5%	500V
C576	1-127-876-11	CERAMIC	0.01uF	10%	50V
C577	1-126-964-11	ELECT	10uF	20%	50V
C578	1-128-813-11	CERAMIC	220PF	5%	50V
C581	1-136-157-00	FILM	0.022uF	5%	50V
		< CONNECTOR >			
* CN572	1-564-104-00	PIN, CONNECTOR (3.96mm PITCH) 3P			
CN574	1-779-799-11	PIN, CONNECTOR 9P			
		< DIODE >			
D575	8-719-991-33	DIODE 1SS133T-77			

The components identified by mark ⚠ or dotted line with mark ⚠ are critical for safety.
Replace only with part number specified.

Ref. No.	Part No.	Description				Remark
D576	8-719-991-33	DIODE 1SS133T-77				
		< IC >				
IC571	8-749-011-16	IC STK350-230				
		< TRANSISTOR >				
Q575	8-729-140-82	TRANSISTOR 2SA988-PAFAEA				
Q576	8-729-140-82	TRANSISTOR 2SA988-PAFAEA				
Q577	8-729-281-53	TRANSISTOR 2SC1815-GR				
		< RESISTOR >				
R560	1-249-411-11	CARBON	330	5%	1/4W	
R561	1-247-831-11	CARBON	1K	5%	1/4W	
R562	1-249-439-11	CARBON	68K	5%	1/4W	
R565	1-249-439-11	CARBON	68K	5%	1/4W	
R566	1-249-422-11	CARBON	2.7K	5%	1/4W	
R571	1-249-428-11	CARBON	8.2K	5%	1/4W	
R572	1-247-847-11	CARBON	4.7K	5%	1/4W	
R574	1-247-831-11	CARBON	1K	5%	1/4W	
R575	1-249-399-11	CARBON	33	5%	1/4W	F
R576	1-240-855-81	CARBON	6.2K	5%	1/4W	F
R577	1-247-847-11	CARBON	4.7K	5%	1/4W	
R578	1-234-182-11	ENCAPSULATED COMPONENT 0.22X2 5W				
R579	1-249-419-11	CARBON	1.5K	5%	1/4W	
R580	1-249-439-11	CARBON	68K	5%	1/4W	
R581	1-249-393-11	CARBON	10	5%	1/4W	F
R582	1-249-399-11	CARBON	33	5%	1/4W	F
R583	1-249-431-11	CARBON	15K	5%	1/4W	
R584	1-249-431-11	CARBON	15K	5%	1/4W	
R585	1-247-847-11	CARBON	4.7K	5%	1/4W	
R586	1-247-871-11	CARBON	47K	5%	1/4W	
R587	1-247-871-11	CARBON	47K	5%	1/4W	
R588	1-247-863-11	CARBON	22K	5%	1/4W	
R596	1-249-431-11	CARBON	15K	5%	1/4W	

****

SPEAKER BOARD
****

Ref. No.	Part No.	Description				Remark
		< CAPACITOR >				
CC16	1-127-876-11	CERAMIC	0.01uF	10%	50V	(DE597P)
CC17	1-127-876-11	CERAMIC	0.01uF	10%	50V	(DE597P)
		< CONNECTOR >				
CNP501	1-564-320-00	PIN, CONNECTOR (3.96mm PITCH) 2P				
CNP502	1-779-978-11	PIN, CONNECTOR 3P				
CNP503	1-564-321-00	PIN, CONNECTOR (3.96mm PITCH) 2P				
		< DIODE >				
D510	8-719-991-33	DIODE 1SS133T-77				
		< COIL >				
L571	1-420-872-52	COIL, AIR-CORE				
L751	1-420-872-52	COIL, AIR-CORE				
		< TRANSISTOR >				
Q550	8-729-119-79	TRANSISTOR 2SC2785-FEK				
		< RESISTOR >				
R531	1-247-847-11	CARBON	4.7K	5%	1/4W	
R534	1-249-404-00	CARBON	82	5%	1/4W	F
R578	1-249-389-11	CARBON	4.7	5%	1/4W	F
R751	1-249-389-11	CARBON	4.7	5%	1/4W	F
RR16	1-249-393-11	CARBON	10	5%	1/4W	F (DE597P)
RR17	1-249-393-11	CARBON	10	5%	1/4W	F (DE597P)
		< RELAY >				
RY501	1-755-421-11	RELAY				
		< TERMINAL BOARD >				
TM501	1-694-933-12	TERMINAL BOARD (4P) (SPEAKERS SURROUND BACK,CENTER)				

****

Ref. No.	Part No.	Description				Remark
	A-4750-646-A	STANDBY BOARD, COMPLETE (K6800P)				
	A-4750-714-A	STANDBY BOARD, COMPLETE (DE597P)				
		**********				
	1-533-399-11	HOLDER, FUSE (DE597P)				
	1-533-399-31	HOLDER, FUSE (K6800P)				
		< CAPACITOR >				
C913	1-164-159-11	CERAMIC	0.1uF		50V	
C914	1-164-159-11	CERAMIC	0.1uF		50V	
C915	1-126-943-11	ELECT	2200uF	20%	25V	
C916	1-126-942-61	ELECT	1000uF	20%	25V	
C920	1-164-159-11	CERAMIC	0.1uF		50V	
C921	1-164-159-11	CERAMIC	0.1uF		50V	
C922	1-164-159-11	CERAMIC	0.1uF		50V	
C924	1-126-959-11	ELECT	0.47uF	20%	50V	
C950	1-126-936-11	ELECT	3300uF	20%	16V	
		< CONNECTOR >				
CNP801	1-766-203-11	PLUG, CONNECTOR PIN (PC BOARD) 5P				
CNP804	1-564-506-11	PLUG, CONNECTOR 3P				
CNP901	1-564-321-00	PIN, CONNECTOR (3.96mm PITCH) 2P				
CNP902	1-794-577-21	PIN, CONNECTOR (POWER) 2P				
CNP903	1-784-922-11	PIN, CONNECTOR 5P				
		< DIODE >				
D901	8-719-991-33	DIODE 1SS133T-77				
D910	6-500-522-11	DIODE 10EDB40-TA2B5				
D911	6-500-522-11	DIODE 10EDB40-TA2B5				
D912	6-500-522-11	DIODE 10EDB40-TA2B5				
D913	6-500-522-11	DIODE 10EDB40-TA2B5				
D914	8-719-991-33	DIODE 1SS133T-77				
D915	8-719-991-33	DIODE 1SS133T-77				
D920	6-500-522-11	DIODE 10EDB40-TA2B5				
D921	6-500-522-11	DIODE 10EDB40-TA2B5				
D922	6-500-522-11	DIODE 10EDB40-TA2B5				
D923	6-500-522-11	DIODE 10EDB40-TA2B5				

STANDBY TUNING VIDEO

Ref. No.	Part No.	Description				Remark
		< EARTH TERMINAL >				
* G901	1-537-738-21	TERMINAL, EARTH				
		< TRANSISTOR >				
Q901	8-729-119-79	TRANSISTOR 2SC2785-FEK				
Q921	8-729-119-79	TRANSISTOR 2SC2785-FEK				
		< RESISTOR >				
⚠R810	1-243-634-11	FUSIBLE	0.22	5%	1/2W	F
⚠R811	1-243-634-11	FUSIBLE	0.22	5%	1/2W	F
⚠R901	1-219-237-11	SOLID	3.3M	20%	1/2W	F (US)
R902	1-247-871-11	CARBON	47K	5%	1/4W	
R903	1-247-847-11	CARBON	4.7K	5%	1/4W	
R904	1-249-381-11	CARBON	1	5%	1/4W	F
R921	1-247-871-11	CARBON	47K	5%	1/4W	
R922	1-247-863-11	CARBON	22K	5%	1/4W	
R923	1-249-429-11	CARBON	10K	5%	1/4W	
		< RELAY >				
⚠RY901	1-755-298-11	RELAY				
		< TRANSFORMER >				
⚠T902	1-435-281-11	TRANSFORMER, POWER (US)				
⚠T902	1-435-282-11	TRANSFORMER, POWER (AEP,UK,AUS)				
**********						
	1-861-056-11	TUNING BOARD				
		**********				
		< RESISTOR >				
R134	1-249-415-11	CARBON	680	5%	1/4W	
R135	1-247-831-11	CARBON	1K	5%	1/4W	
R136	1-249-419-11	CARBON	1.5K	5%	1/4W	
R137	1-249-421-11	CARBON	2.2K	5%	1/4W	
R138	1-247-847-11	CARBON	4.7K	5%	1/4W	
		< SWITCH >				
S136	1-771-410-21	SWITCH, TACTILE (TUNING –)				
S137	1-771-410-21	SWITCH, TACTILE (FM MODE)				
S138	1-771-410-21	SWITCH, TACTILE (MEMORY)				
S139	1-771-410-21	SWITCH, TACTILE (PRESET TUNING –)				
S140	1-771-410-21	SWITCH, TACTILE (PRESET TUNING +)				
S141	1-771-410-21	SWITCH, TACTILE (TUNING +)				
**********						
	A-4750-662-A	VIDEO BOARD, COMPLETE (DE597P:AUS/K6800P)				
	A-4750-721-A	VIDEO BOARD, COMPLETE (DE597P:AEP,UK)				
		**********				
		< CAPACITOR >				
C200	1-128-805-11	CERAMIC	47PF	5%	50V	
C201	1-128-805-11	CERAMIC	47PF	5%	50V	
C206	1-126-964-11	ELECT	10uF	20%	50V	
C207	1-126-964-11	ELECT	10uF	20%	50V	
C208	1-126-964-11	ELECT	10uF	20%	50V	
C209	1-126-964-11	ELECT	10uF	20%	50V	

Ref. No.	Part No.	Description				Remark
C210	1-126-964-11	ELECT	10uF	20%	50V	
C213	1-126-923-11	ELECT	220uF	20%	10V	
C214	1-164-159-11	CERAMIC	0.1uF		50V	
C215	1-164-159-11	CERAMIC	0.1uF		50V	
C220	1-126-947-11	ELECT	47uF	20%	35V	
C221	1-126-923-11	ELECT	220uF	20%	10V	
C223	1-164-159-11	CERAMIC	0.1uF		50V	
C224	1-164-159-11	CERAMIC	0.1uF		50V	
C248	1-128-825-11	CERAMIC	0.0022uF	5%	50V	
C308	1-126-964-11	ELECT	10uF	20%	50V	(DE597P:AUS/K6800P)
C309	1-126-964-11	ELECT	10uF	20%	50V	(DE597P:AUS/K6800P)
C310	1-126-964-11	ELECT	10uF	20%	50V	(DE597P:AUS/K6800P)
C311	1-126-964-11	ELECT	10uF	20%	50V	(DE597P:AUS/K6800P)
C312	1-126-964-11	ELECT	10uF	20%	50V	(DE597P:AUS/K6800P)
C313	1-126-964-11	ELECT	10uF	20%	50V	(DE597P:AUS/K6800P)
C316	1-128-825-11	CERAMIC	0.0022uF	5%	50V	
C317	1-126-947-11	ELECT	47uF	20%	35V	(DE597P:AUS/K6800P)
C329	1-164-159-11	CERAMIC	0.1uF		50V	(DE597P:AUS/K6800P)
C330	1-164-159-11	CERAMIC	0.1uF		50V	(DE597P:AUS/K6800P)
C331	1-164-159-11	CERAMIC	0.1uF		50V	(DE597P:AUS/K6800P)
C332	1-164-159-11	CERAMIC	0.1uF		50V	(DE597P:AUS/K6800P)
C338	1-126-947-11	ELECT	47uF	20%	35V	(DE597P:AUS/K6800P)
		< CONNECTOR >				
CNP203	1-691-765-11	PLUG (MICRO CONNECTOR) 3P				
CNS250	1-568-439-11	SOCKET, CONNECTOR 7P				
		< DIODE >				
D203	8-719-991-33	DIODE 1SS133T-77				
D204	8-719-991-33	DIODE 1SS133T-77				
		< IC >				
IC203	6-701-890-01	IC NJM2595D				
IC301	8-759-231-66	IC TC74HC4053AP (DE597P:AUS/K6800P)				
IC302	6-701-891-01	IC NJM2581D (DE597P:AUS/K6800P)				
IC804	8-759-701-65	IC NJM79M05FA				
IC807	8-759-231-53	IC TA7805S				
		< JACK >				
J200	1-794-978-11	JACK, PIN 3P (DVD VIDEO IN, VIDEO 2 VIDEO IN,VIDEO 1 VIDEO OUT)				
J201	1-815-043-11	JACK, PIN 2P (VIDEO 1 VIDEO IN, MONITOR VIDEO OUT)				
J301	1-816-592-11	JACK, PIN 9P (COMPONENT VIDEO DVD IN,VIDEO 2 IN,MONITOR OUT) (DE597P:AUS/K6800P)				

The components identified by mark ⚠ or dotted line with mark ⚠ are critical for safety.
Replace only with part number specified.

Ref. No.	Part No.	Description	Remark
		< TRANSISTOR >	
Q301	8-729-116-02	TRANSISTOR BA1A4M-TP	(DE597P:AUS/K6800P)
		< RESISTOR >	
R200	1-247-804-11	CARBON 75 5% 1/4W	
R201	1-247-804-11	CARBON 75 5% 1/4W	
R218	1-247-804-11	CARBON 75 5% 1/4W	
R219	1-247-804-11	CARBON 75 5% 1/4W	
R220	1-247-804-11	CARBON 75 5% 1/4W	
R221	1-247-804-11	CARBON 75 5% 1/4W	
R301	1-247-804-11	CARBON 75 5% 1/4W	(DE597P:AUS/K6800P)
R302	1-247-804-11	CARBON 75 5% 1/4W	(DE597P:AUS/K6800P)
R303	1-247-804-11	CARBON 75 5% 1/4W	(DE597P:AUS/K6800P)
R304	1-247-804-11	CARBON 75 5% 1/4W	(DE597P:AUS/K6800P)
R305	1-247-804-11	CARBON 75 5% 1/4W	(DE597P:AUS/K6800P)
R306	1-247-804-11	CARBON 75 5% 1/4W	(DE597P:AUS/K6800P)
R307	1-247-804-11	CARBON 75 5% 1/4W	(DE597P:AUS/K6800P)
R308	1-247-804-11	CARBON 75 5% 1/4W	(DE597P:AUS/K6800P)
R309	1-247-804-11	CARBON 75 5% 1/4W	(DE597P:AUS/K6800P)
R310	1-247-831-11	CARBON 1K 5% 1/4W	(DE597P:AUS/K6800P)
R311	1-247-831-11	CARBON 1K 5% 1/4W	(DE597P:AUS/K6800P)
R312	1-247-831-11	CARBON 1K 5% 1/4W	(DE597P:AUS/K6800P)
R313	1-247-863-11	CARBON 22K 5% 1/4W	(DE597P:AUS/K6800P)
R325	1-249-429-11	CARBON 10K 5% 1/4W	(DE597P:AUS/K6800P)
R347	1-247-807-31	CARBON 100 5% 1/4W	(DE597P:AUS/K6800P)

****

Ref. No.	Part No.	Description	Remark
		MISCELLANEOUS	
		**********	
53	1-773-150-11	WIRE (FLAT TYPE) (21 CORE)	
102	1-769-937-11	WIRE (FLAT TYPE) (11 CORE)	(DE597P:AUS/K6800P)
102	1-773-001-11	WIRE (FLAT TYPE) (15 CORE) (DE597P:AEP,UK)	
⚠103	1-777-071-23	CORD, POWER (AEP,UK)	
⚠103	1-783-820-11	CORD, POWER (US)	
⚠103	1-827-295-22	CORD, POWER (AUS)	
106	1-769-879-11	WIRE (FLAT TYPE) (7 CORE)	
⚠F901	1-532-464-32	FUSE (T2.5AL/250V) (AEP,UK,AUS)	
⚠F901	1-533-454-12	FUSE, GLASS TUBE (DIA.5) (6.3A/125V) (US)	
FC901	1-500-386-11	FILTER, CLAMP (FERRITE CORE) (K6800P)	
Q503	8-749-010-25	TRANSISTOR MN2488-OPY-M	
Q504	8-749-010-26	TRANSISTOR MP1620-OPY-M	
Q572	8-729-026-08	TRANSISTOR 2SC4495	
Q573	8-749-010-25	TRANSISTOR MN2488-OPY-M	
Q574	8-749-010-26	TRANSISTOR MP1620-OPY-M	
Q603	8-749-010-25	TRANSISTOR MN2488-OPY-M	
Q604	8-749-010-26	TRANSISTOR MP1620-OPY-M	
Q653	8-749-010-25	TRANSISTOR MN2488-OPY-M	
Q654	8-749-010-26	TRANSISTOR MP1620-OPY-M	
Q703	8-749-010-25	TRANSISTOR MN2488-OPY-M	
Q704	8-749-010-26	TRANSISTOR MP1620-OPY-M	
Q753	8-749-010-25	TRANSISTOR MN2488-OPY-M	
Q754	8-749-010-26	TRANSISTOR MP1620-OPY-M	
⚠T901	1-439-550-12	TRANSFORMER, POWER (AEP,UK,AUS)	
⚠T901	1-439-583-11	TRANSFORMER, POWER (US)	
TN1	1-693-577-13	TUNER PACK (ANTENNA) (K6800P)	
TN1	1-693-578-13	TUNER PACK (ANTENNA) (DE597P:AEP,UK)	
TN1	1-693-580-21	TUNER PACK (ANTENNA) (DE597P:AUS)	

The components identified by mark ⚠ or dotted line with mark ⚠ are critical for safety.
Replace only with part number specified.

REVISION HISTORY

Clicking the version allows you to jump to the revised page.
Also, clicking the version at the upper on the revised page allows you to jump to the next revised page.

Ver.	Date	Description of Revision
1.0	2004. 06	New

SS-CNP88/MSP88

SERVICE MANUAL

US Model

Ver 1.0 2004. 06

SS-MSP88 SS-CNP88

- SS-CNP88 (center speaker) and SS-MSP88 (front/surround/surround back speaker) are the speaker section in HT-6800DP/DDW960.

SPECIFICATIONS

Front/surround/surround back speakers (SS-MSP88)
Center speaker (SS-CNP88)

Speaker system	Full range, magnetically shielded
Speaker units	
SS-MSP88	80 mm cone type
SS-CNP88	57 mm cone type × 2
Enclosure type	Bass reflex
Rated Impedance	8 ohms
Dimension (w/h/d) (Approx.)	
SS-MSP88	4 1/8 × 6 × 5 inches (105 × 153 × 127 mm)
SS-CNP88	7 7/8 × 3 1/8 × 5 1/8 inches (200 × 79 × 130 mm)
Mass (Approx.)	
SS-MSP88	2 lb 11 oz (1.2 kg)
SS-CNP88	1 lb 13 oz (0.8 kg)

Design and specifications are subject to change without notice.

PARTS LIST

Part No.	Description	Remark
A-4715-492-A	OVERALL ASSY (SS-MSP88)	
A-4715-494-A	OVERALL ASSY (SS-CNP88)	

SPEAKER SYSTEM

9-879-031-01 **Sony Corporation**
2004F04-1 **Home Audio Company**
© 2004. 06
Published by Sony Engineering Corporation

SONY®

REVISION HISTORY

Clicking the version allows you to jump to the revised page.
Also, clicking the version at the upper on the revised page allows you to jump to the next revised page.

Ver.	Date	Description of Revision
1.0	2004. 06	New

SA-WMSP68

SERVICE MANUAL

US Model

Ver 1.0 2004.07

• SA-WMSP68 is the subwoofer section in HT-5800DP/6800DP/DDW960.

SPECIFICATIONS

AUDIO POWER SPECIFICATIONS

POWER OUTPUT AND TOTAL HARMONIC DISTORTION:
With 6 ohm loads, from 28 – 200 Hz; rated 100 watts, minimum RMS power, with no more than 0.8% total harmonic distortion from 250 milliwatts to rated output.

Speaker system	Active subwoofer, magnetically shielded
Speaker unit	250 mm cone type
Enclosure type	Acoustically loaded bass reflex
RMS output	120 W (6 ohms, 100 Hz, THD 10%)
Input	LINE IN (input pin jacks)
Power requirements	120 V AC, 60 Hz
Power consumption	95 W
Dimensions (w/h/d) (Approx.)	13 3/8 × 16 2/8 × 14 4/8 inches (337 × 410 × 365.5 mm) including front panel
Mass (Approx.)	28 lb 11 oz (13.0 kg)

Design and specifications are subject to change without notice.

SUB WOOFER

9-879-059-01
2004G04-1
© 2004.07

Sony Corporation
Home Audio Company
Published by Sony Engineering Corporation

SONY®

SAFETY CHECK-OUT

After correcting the original service problem, perform the following safety check before releasing the set to the customer:
Check the antenna terminals, metal trim, “metallized” knobs, screws, and all other exposed metal parts for AC leakage.
Check leakage as described below.

LEAKAGE TEST

The AC leakage from any exposed metal part to earth ground and from all exposed metal parts to any exposed metal part having a return to chassis, must not exceed 0.5 mA (500 microampers.). Leakage current can be measured by any one of three methods.

1. A commercial leakage tester, such as the Simpson 229 or RCA WT-540A. Follow the manufacturers’ instructions to use these instruments.
2. A battery-operated AC milliammeter. The Data Precision 245 digital multimeter is suitable for this job.
3. Measuring the voltage drop across a resistor by means of a VOM or battery-operated AC voltmeter. The “limit” indication is 0.75 V, so analog meters must have an accurate low-voltage scale. The Simpson 250 and Sanwa SH-63Trd are examples of a passive VOM that is suitable. Nearly all battery operated digital multimeters that have a 2 V AC range are suitable. (See Fig. A)

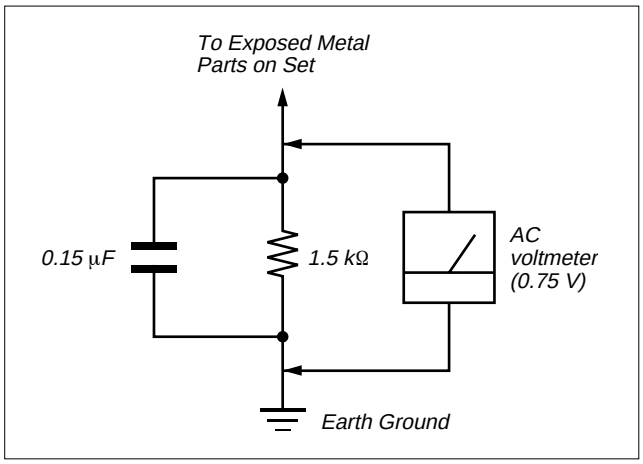

(Fig. A)

SAFETY-RELATED COMPONENT WARNING!!

COMPONENTS IDENTIFIED BY MARK ⚠ OR DOTTED LINE WITH MARK ⚠ ON THE SCHEMATIC DIAGRAMS AND IN THE PARTS LIST ARE CRITICAL TO SAFE OPERATION. REPLACE THESE COMPONENTS WITH SONY PARTS WHOSE PART NUMBERS APPEAR AS SHOWN IN THIS MANUAL OR IN SUPPLEMENTS PUBLISHED BY SONY.

TABLE OF CONTENTS

1. DIAGRAMS
1-1. Note for Printed Wiring Boards and Schematic Diagrams 3
1-2. Circuit Boards Location 3
1-3. Schematic Diagram – Main Section – 5
1-4. Printed Wiring Boards – Main Section – 6

2. EXPLODED VIEWS
2-1. Front Section 7
2-2. Rear Section 8

3. ELECTRICAL PARTS LIST 9

● UNLEADED SOLDER

Boards requiring use of unleaded solder are printed with the lead-free mark (LF) indicating the solder contains no lead.
(Caution: Some printed circuit boards may not come printed with the lead free mark due to their particular size.)

: LEAD FREE MARK

Unleaded solder has the following characteristics.

- Unleaded solder melts at a temperature about 40°C higher than ordinary solder.
  Ordinary soldering irons can be used but the iron tip has to be applied to the solder joint for a slightly longer time.
  Soldering irons using a temperature regulator should be set to about 350°C.
  Caution: The printed pattern (copper foil) may peel away if the heated tip is applied for too long, so be careful!
- Strong viscosity
  Unleaded solder is more viscous (sticky, less prone to flow) than ordinary solder so use caution not to let solder bridges occur such as on IC pins, etc.
- Usable with ordinary solder
  It is best to use only unleaded solder but unleaded solder may also be added to ordinary solder.

SECTION 1
DIAGRAMS

1-1. NOTE FOR PRINTED WIRING BOARDS AND SCHEMATIC DIAGRAMS

THIS NOTE IS COMMON FOR PRINTED WIRING BOARDS AND SCHEMATIC DIAGRAMS.
(In addition to this, the necessary note is printed in each block.)

For schematic diagrams.

Note:
- All capacitors are in μF unless otherwise noted. (p: pF) 50 WV or less are not indicated except for electrolytics and tantalums.
- All resistors are in Ω and 1/4 W or less unless otherwise specified.
- ▭ : panel designation.

Note: The components identified by mark ⚠ or dotted line with mark ⚠ are critical for safety.
Replace only with part number specified.

- ▬▬ : B+ Line.
- ▬ ▬ ▬ : B– Line.
- Voltages are dc with respect to ground under no-signal (detuned) conditions.
  no mark : Power on
- Voltages are taken with a VOM (Input impedance 10 MΩ). Voltage variations may be noted due to normal production tolerances.
- Signal path.
  ⇨ : AUDIO

For printed wiring boards.

Note:
- o——— : parts extracted from the component side.
- ——— : parts extracted from the conductor side.
- ▇ : Pattern from the side which enables seeing.

1-2. CIRCUIT BOARDS LOCATION

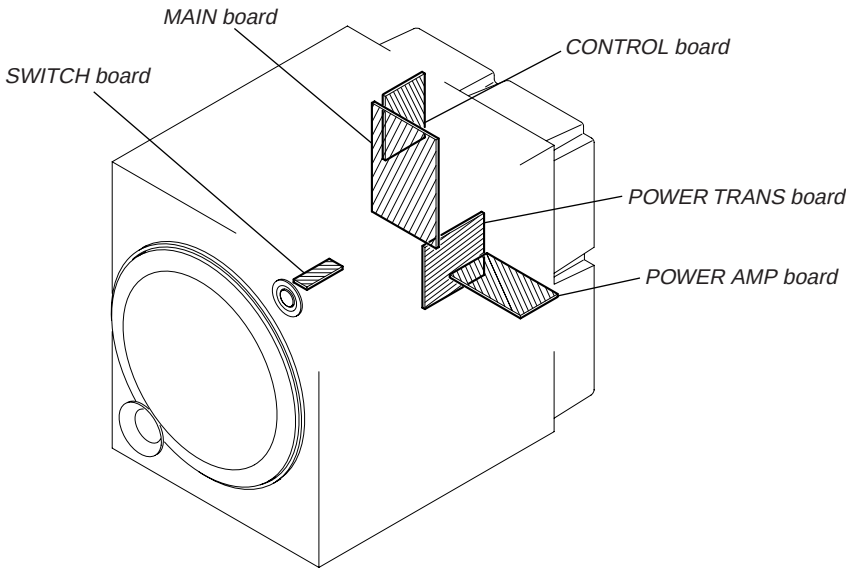

• IC BLOCK DIAGRAM

IC301 STK404-130S (POWER AMP Board)

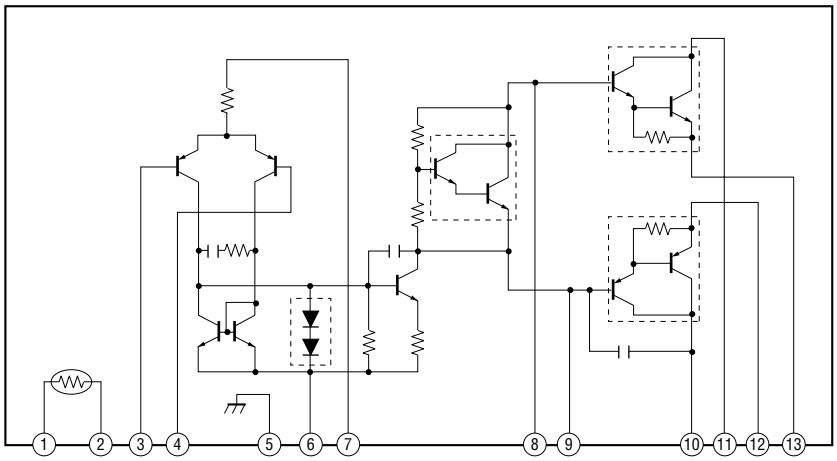

1-3. SCHEMATIC DIAGRAM — MAIN SECTION — • Refer to page 4 for IC Block Diagram.

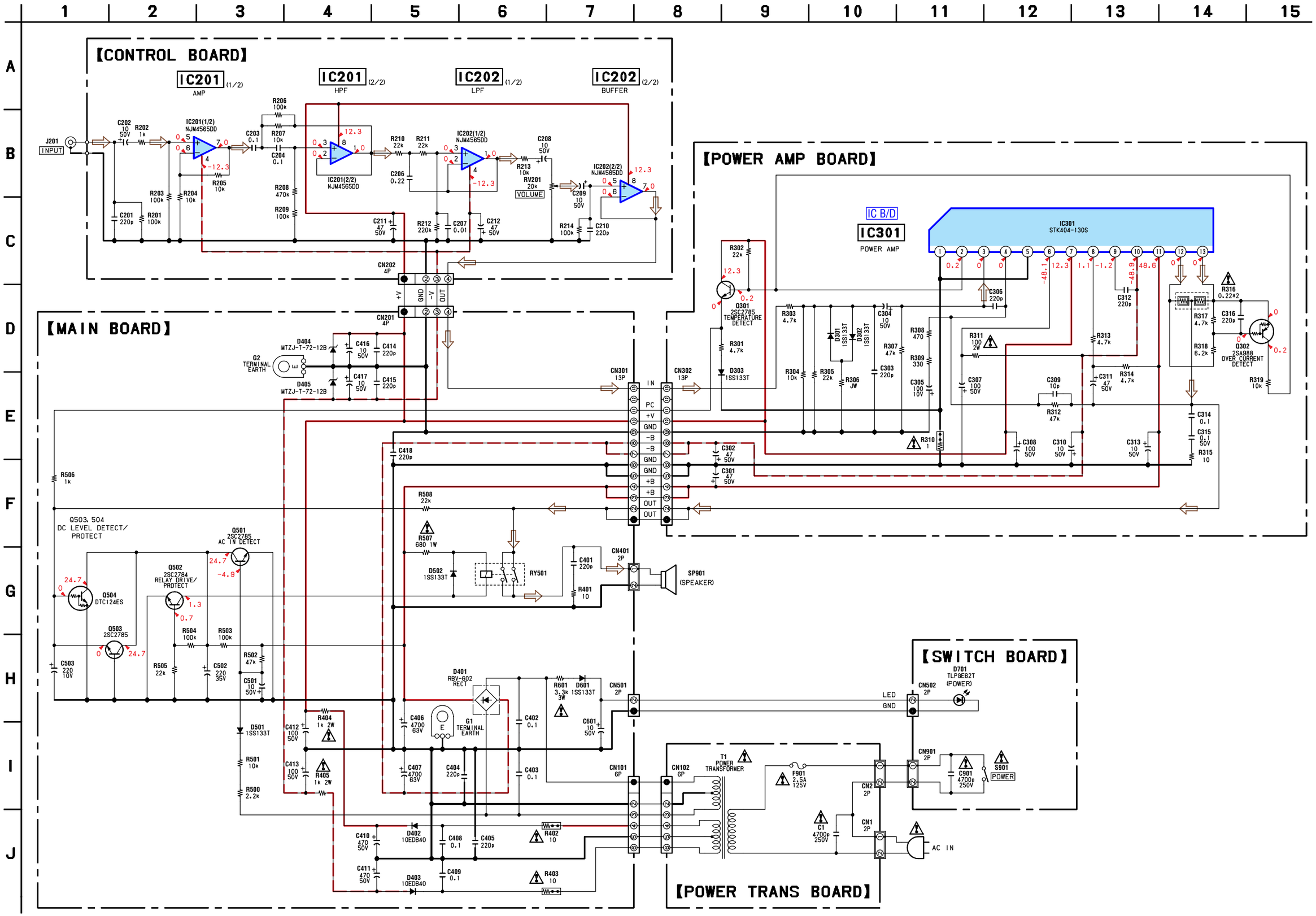

1-4. PRINTED WIRING BOARDS — MAIN SECTION —

• Refer to page 3 for Circuit Boards Location.

: Uses unleaded solder.

• **Semiconductor Location**

Ref. No.	Location
D301	C-2
D302	C-2
D303	C-3
D401	D-10
D402	D-9
D403	D-9
D404	A-7
D405	A-7
D501	C-9
D502	C-7
D601	D-8
D701	G-5
IC201	F-2
IC202	G-2
IC301	D-3
Q301	B-2
Q302	B-4
Q501	C-8
Q502	C-8
Q503	C-8
Q504	C-8

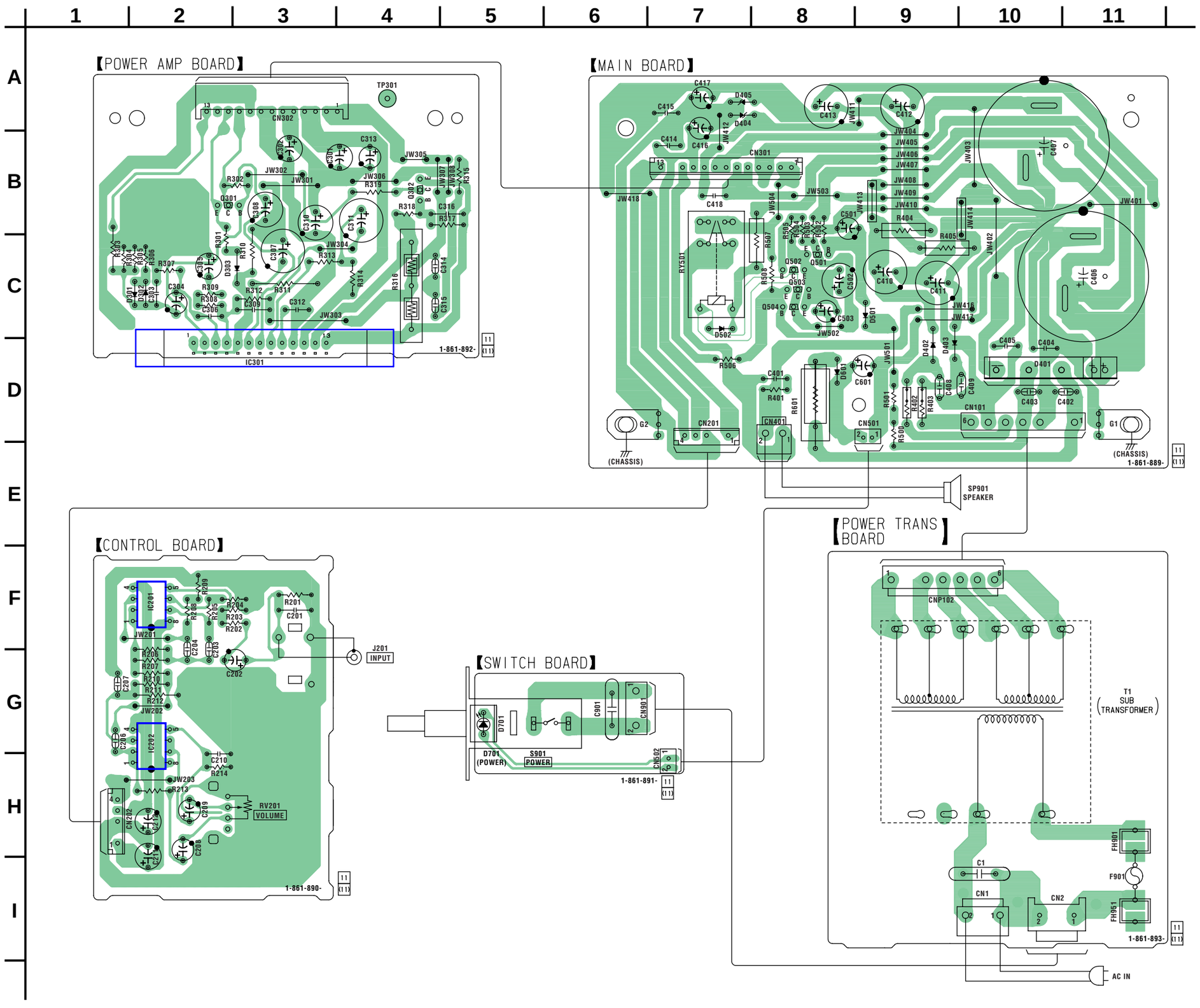

SECTION 2
EXPLODED VIEWS

NOTE:
- The mechanical parts with no reference number in the exploded views are not supplied.
- Items marked "*" are not stocked since they are seldom required for routine service. Some delay should be anticipated when ordering these items.
- -XX and -X mean standardized parts, so they may have some difference from the original one.
- Color Indication of Appearance Parts
  Example :
  KNOB, BALANCE (WHITE) ... (RED)
  ↑ Parts Color ↑ Cabinet's Color
- Accessories are given in the last of this parts list.

The components identified by mark ⚠ or dotted line with mark ⚠ are critical for safety.
Replace only with part number specified.

2-1. FRONT SECTION

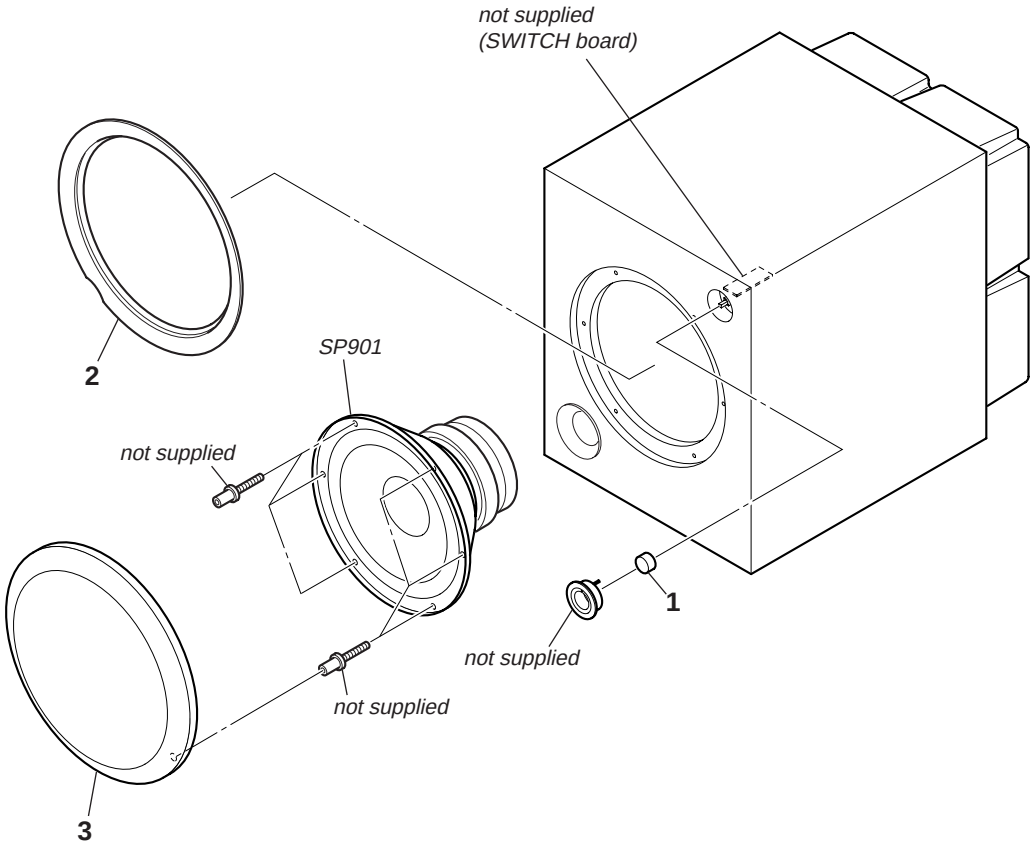

Ref. No.	Part No.	Description	Remark	Ref. No.	Part No.	Description	Remark
1	4-253-282-01	KNOB, PUSH		3	4-253-280-01	GRILLE (FRAME)	
2	4-253-279-01	WOOFER (RING)		SP901	1-825-768-11	SPEAKER (25cm) (WOOFER)	

2-2. REAR SECTION

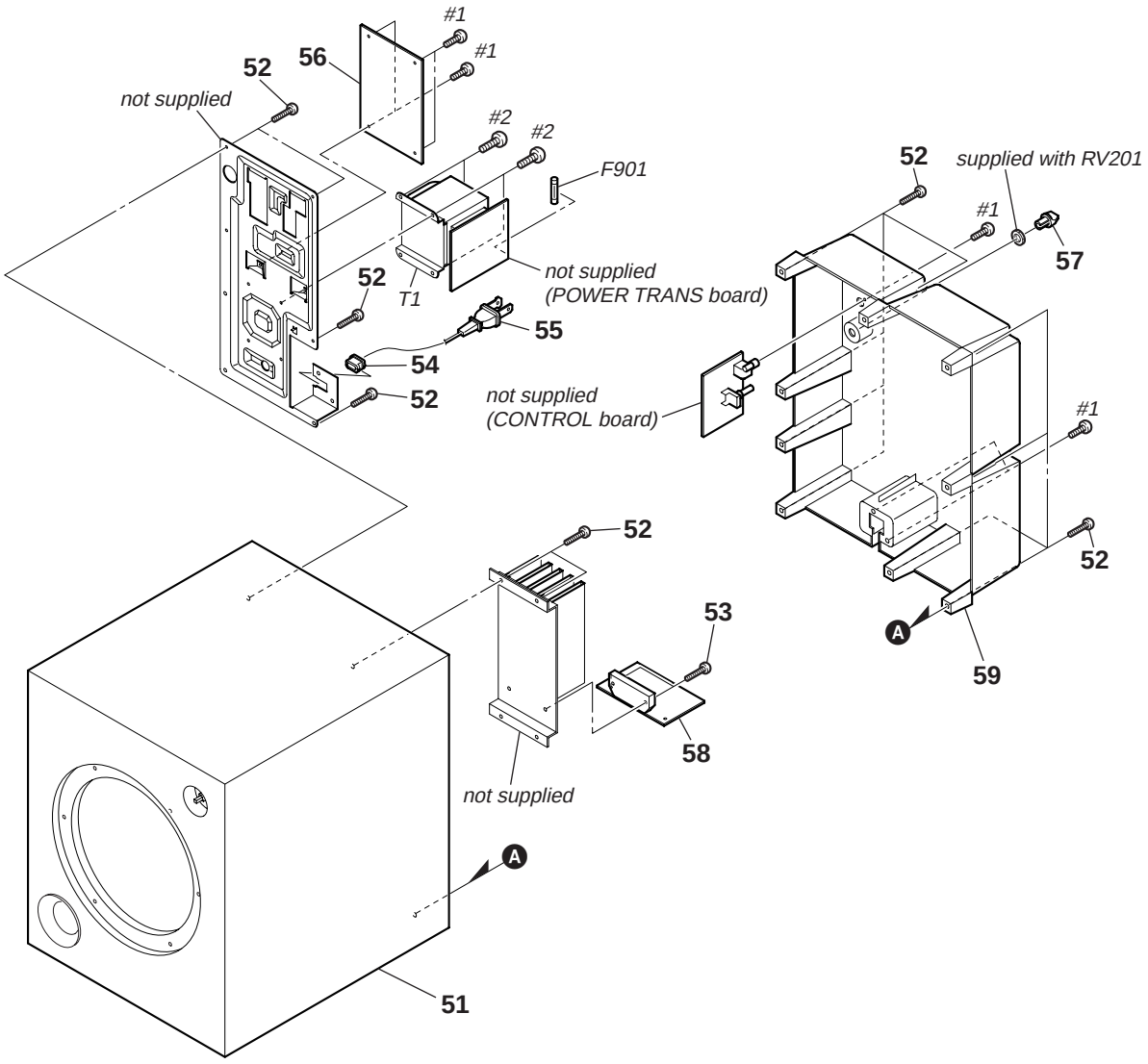

The components identified by mark ⚠ or dotted line with mark. ⚠ are critical for safety.
Replace only with part number specified.

Ref. No.	Part No.	Description	Remark
51	A-4713-864-A	CABINET ASSY, SPEAKER	
52	4-235-677-01	SCREW (4X20) (TYPE1), +BVTP	
53	3-905-609-31	SCREW (TRANSISTOR)	
* 54	3-703-244-00	BUSHING (2104), CORD	
⚠55	1-783-820-11	CORD, POWER	
56	A-4751-955-A	MAIN BOARD, COMPLETE	
57	4-999-482-81	KNOB (VOL)	

Ref. No.	Part No.	Description	Remark
58	A-4751-957-A	POWER AMP BOARD, COMPLETE	
59	4-253-276-01	REAR (COVER)	
⚠F901	1-533-450-12	FUSE, GLASS TUBE (DIA.5) (2.5A/125V)	
⚠T1	1-439-625-12	TRANSFORMER, POWER	
#1	7-685-646-79	SCREW +BVTP 3X8 TYPE2 N-S	
#2	7-685-881-09	SCREW +BVTT 4X8 (S)	

SECTION 3
ELECTRICAL PARTS LIST

CONTROL | MAIN

NOTE:
- Due to standardization, replacements in the parts list may be different from the parts specified in the diagrams or the components used on the set.
- -XX and -X mean standardized parts, so they may have some difference from the original one.
- RESISTORS
  All resistors are in ohms.
  METAL:Metal-film resistor.
  METAL OXIDE: Metal oxide-film resistor.
  F:nonflammable
- Items marked "*" are not stocked since they are seldom required for routine service. Some delay should be anticipated when ordering these items.
- SEMICONDUCTORS
  In each case, u : µ, for example:
  uA.. : µA.. uPA.. : µPA..
  uPB.. : µPB.. uPC.. : µPC.. uPD.. : µPD..
- CAPACITORS
  uF : µF
- COILS
  uH : µH

The components identified by mark ⚠ or dotted line with mark. ⚠ are critical for safety. Replace only with part number specified.

When indicating parts by reference number, please include the board.

Ref. No.	Part No.	Description			Remark
		CONTROL BOARD			
		**********			
		< CAPACITOR >			
C201	1-128-813-11	CERAMIC	220PF	5%	50V
C202	1-126-964-11	ELECT	10uF	20%	50V
C203	1-136-165-00	FILM	0.1uF	5%	50V
C204	1-136-165-00	FILM	0.1uF	5%	50V
C206	1-131-696-11	FILM	0.22uF	5%	50V
C207	1-131-679-31	FILM	0.01uF	5%	50V
C208	1-126-964-11	ELECT	10uF	20%	50V
C209	1-126-964-11	ELECT	10uF	20%	50V
C210	1-128-813-11	CERAMIC	220PF	5%	50V
C211	1-126-967-11	ELECT	47uF	20%	50V
C212	1-126-967-11	ELECT	47uF	20%	50V
		< CONNECTOR >			
CN202	1-818-594-11	PIN, CONNECTOR 4P			
		< IC >			
IC201	8-759-636-74	IC M5218AP-22			
IC202	8-759-636-74	IC M5218AP-22			
		< JACK >			
J201	1-815-025-11	JACK, PIN 1P (INPUT)			
		< RESISTOR >			
R201	1-247-879-11	CARBON	100K	5%	1/4W
R202	1-247-831-11	CARBON	1K	5%	1/4W
R203	1-247-879-11	CARBON	100K	5%	1/4W
R204	1-249-429-11	CARBON	10K	5%	1/4W
R205	1-249-429-11	CARBON	10K	5%	1/4W
R206	1-247-879-11	CARBON	100K	5%	1/4W
R207	1-249-429-11	CARBON	10K	5%	1/4W
R208	1-247-895-00	CARBON	470K	5%	1/4W
R209	1-247-879-11	CARBON	100K	5%	1/4W
R210	1-247-863-11	CARBON	22K	5%	1/4W
R211	1-247-863-11	CARBON	22K	5%	1/4W
R212	1-247-887-00	CARBON	220K	5%	1/4W
R213	1-249-429-11	CARBON	10K	5%	1/4W
R214	1-247-879-11	CARBON	100K	5%	1/4W

Ref. No.	Part No.	Description			Remark
		< VARIABLE RESISTOR >			
RV201	1-227-511-11	RES, VAR, CARBON 20K (VOLUME)			
**********					
	A-4751-955-A	MAIN BOARD, COMPLETE			
		**********			
		< CAPACITOR >			
C401	1-128-813-11	CERAMIC	220PF	5%	50V
C402	1-136-165-00	FILM	0.1uF	5%	50V
C403	1-136-165-00	FILM	0.1uF	5%	50V
C404	1-128-813-11	CERAMIC	220PF	5%	50V
C405	1-128-813-11	CERAMIC	220PF	5%	50V
C406	1-100-935-11	ELECT	4700uF		63V
C407	1-100-935-11	ELECT	4700uF		63V
C408	1-136-165-00	FILM	0.1uF	5%	50V
C409	1-136-165-00	FILM	0.1uF	5%	50V
C410	1-126-971-11	ELECT	470uF	20%	50V
C411	1-126-971-11	ELECT	470uF	20%	50V
C412	1-126-968-11	ELECT	100uF	20%	50V
C413	1-126-968-11	ELECT	100uF	20%	50V
C414	1-128-813-11	CERAMIC	220PF	5%	50V
C415	1-128-813-11	CERAMIC	220PF	5%	50V
C416	1-126-964-11	ELECT	10uF	20%	50V
C417	1-126-964-11	ELECT	10uF	20%	50V
C418	1-128-813-11	CERAMIC	220PF	5%	50V
C501	1-126-964-11	ELECT	10uF	20%	50V
C502	1-126-949-11	ELECT	220uF	20%	35V
C503	1-126-923-11	ELECT	220uF	20%	10V
C601	1-126-964-11	ELECT	10uF	20%	50V
		< CONNECTOR >			
CN101	1-785-104-11	PIN, CONNECTOR (3.96mm PITCH) 6P			
CN201	1-818-594-11	PIN, CONNECTOR 4P			
CN401	1-564-320-00	PIN, CONNECTOR (3.96mm PITCH) 2P			
CN501	1-564-704-11	PIN, CONNECTOR (SMALL TYPE) 2P			
		< DIODE >			
D401	8-719-302-38	DIODE RBV-602-01			
D402	6-500-522-11	DIODE 10EDB40-TA2B5			
D403	6-500-522-11	DIODE 10EDB40-TA2B5			
D404	8-719-110-31	DIODE RD12ESB2			
D405	8-719-110-31	DIODE RD12ESB2			
D501	8-719-991-33	DIODE 1SS133T-77			

MAIN POWER AMP POWER TRANS SWITCH

Ref. No.	Part No.	Description				Remark
D502	8-719-991-33	DIODE 1SS133T-77				
D601	8-719-991-33	DIODE 1SS133T-77				
		< GROUND TERMINAL >				
G1	1-537-738-21	TERMINAL, GROUND				
G2	1-537-738-21	TERMINAL, GROUND				
		< TRANSISTOR >				
Q501	8-729-119-78	TRANSISTOR 2SC2785-HFE				
Q502	8-729-178-42	TRANSISTOR 2SC2784-F				
Q503	8-729-119-78	TRANSISTOR 2SC2785-HFE				
Q504	8-729-029-86	TRANSISTOR DTC124ESA				
		< RESISTOR >				
R401	1-249-393-11	CARBON	10	5%	1/4W	
⚠R402	1-219-153-11	FUSIBLE	10	5%	1/4W	F
⚠R403	1-219-153-11	FUSIBLE	10	5%	1/4W	F
⚠R404	1-215-892-11	METAL OXIDE	1K	5%	2W	F
⚠R405	1-215-892-11	METAL OXIDE	1K	5%	2W	F
R500	1-249-421-11	CARBON	2.2K	5%	1/4W	
R501	1-249-429-11	CARBON	10K	5%	1/4W	
R502	1-247-871-11	CARBON	47K	5%	1/4W	
R503	1-247-879-11	CARBON	100K	5%	1/4W	
R504	1-247-879-11	CARBON	100K	5%	1/4W	
R505	1-247-863-11	CARBON	22K	5%	1/4W	
R506	1-247-831-11	CARBON	1K	5%	1/4W	
⚠R507	1-215-868-00	METAL OXIDE	680	5%	1W	F
R508	1-247-863-11	CARBON	22K	5%	1/4W	
⚠R601	1-215-920-11	METAL OXIDE	3.3K	5%	3W	F
		< RELAY >				
RY501	1-515-920-11	RELAY (24V)				

****

	A-4751-957-A	POWER AMP BOARD, COMPLETE				
		**********				
		< CAPACITOR >				
C301	1-126-967-11	ELECT	47uF	20%	50V	
C302	1-126-967-11	ELECT	47uF	20%	50V	
C303	1-128-813-11	CERAMIC	220PF	5%	50V	
C304	1-126-964-11	ELECT	10uF	20%	50V	
C305	1-104-658-11	ELECT	100uF	20%	10V	
C306	1-128-813-11	CERAMIC	220PF	5%	50V	
C307	1-126-968-11	ELECT	100uF	20%	50V	
C308	1-126-968-11	ELECT	100uF	20%	50V	
C309	1-162-199-31	CERAMIC	10PF	5%	50V	
C310	1-126-964-11	ELECT	10uF	20%	50V	
C311	1-126-967-11	ELECT	47uF	20%	50V	
C312	1-128-813-11	CERAMIC	220PF	5%	50V	
C313	1-126-964-11	ELECT	10uF	20%	50V	
C314	1-136-165-00	FILM	0.1uF	5%	50V	
C315	1-136-165-00	FILM	0.1uF	5%	50V	
C316	1-128-813-11	CERAMIC	220PF	5%	50V	
		< CONNECTOR >				
CN302	1-818-593-11	PLUG, CONNECTOR 13P				

Ref. No.	Part No.	Description				Remark
		< DIODE >				
D301	8-719-991-33	DIODE 1SS133T-77				
D302	8-719-991-33	DIODE 1SS133T-77				
D303	8-719-991-33	DIODE 1SS133T-77				
		< IC >				
IC301	6-600-091-01	IC STK404-130S				
		< TRANSISTOR >				
Q301	8-729-119-78	TRANSISTOR 2SC2785-HFE				
Q302	8-729-140-82	TRANSISTOR 2SA988-PAFAEA				
		< RESISTOR >				
R301	1-247-847-11	CARBON	4.7K	5%	1/4W	
R302	1-247-863-11	CARBON	22K	5%	1/4W	
R303	1-247-847-11	CARBON	4.7K	5%	1/4W	
R304	1-249-429-11	CARBON	10K	5%	1/4W	
R305	1-247-863-11	CARBON	22K	5%	1/4W	
R307	1-247-871-11	CARBON	47K	5%	1/4W	
R308	1-249-413-11	CARBON	470	5%	1/4W	
R309	1-249-411-11	CARBON	330	5%	1/4W	
⚠R310	1-217-637-00	FUSIBLE	1	5%	1/4W	F
⚠R311	1-215-886-11	METAL OXIDE	100	5%	2W	F
R312	1-247-871-11	CARBON	47K	5%	1/4W	
R313	1-247-847-11	CARBON	4.7K	5%	1/4W	
R314	1-247-847-11	CARBON	4.7K	5%	1/4W	
R315	1-249-393-11	CARBON	10	5%	1/4W	
⚠R316	1-234-182-11	ENCAPSULATED COMPONENT 0.22X2 5W				
R317	1-247-847-11	CARBON	4.7K	5%	1/4W	
R318	1-247-850-11	CARBON	6.2K	5%	1/4W	
R319	1-249-429-11	CARBON	10K	5%	1/4W	

****

		POWER TRANS BOARD				
		**********				
	1-533-217-41	HOLDER, FUSE				
		< CAPACITOR >				
⚠C1	1-113-924-11	CERAMIC	0.0047uF	20%	250V	
		< CONNECTOR >				
CN1	1-564-321-00	PIN, CONNECTOR (3.96mm PITCH) 2P				
* CN2	1-580-230-11	PIN, CONNECTOR (PC BOARD) 2P				

****

		SWITCH BOARD				
		**********				
		< CAPACITOR >				
⚠C901	1-113-924-11	CERAMIC	0.0047uF	20%	250V	
		< CONNECTOR >				
CN502	1-564-704-11	PIN, CONNECTOR (SMALL TYPE) 2P				
* CN901	1-695-044-11	PIN, CONNECTOR (3.96mm PITCH) 2P				

The components identified by mark ⚠ or dotted line with mark. ⚠ are critical for safety. Replace only with part number specified.

SWITCH

Ref. No.	Part No.	Description	Remark
		< DIODE >	
D701	6-500-991-01	LED TLPGE62T(SONY-M.F) (POWER)	
		< SWITCH >	
⚠S901	1-554-920-11	SWITCH, PUSH (AC POWER) (1 KEY) (POWER)	

****

		MISCELLANEOUS	
		**********	
⚠55	1-783-820-11	CORD, POWER	
⚠F901	1-533-450-12	FUSE, GLASS TUBE (DIA.5) (2.5A/125V)	
SP901	1-825-768-11	SPEAKER (25cm) (WOOFER)	
⚠T1	1-439-625-12	TRANSFORMER, POWER	

The components identified by mark ⚠ or dotted line with mark. ⚠ are critical for safety.
Replace only with part number specified.

REVISION HISTORY

Clicking the version allows you to jump to the revised page.
Also, clicking the version at the upper on the revised page allows you to jump to the next revised page.

Ver.	Date	Description of Revision
1.0	2004.07	New

DVP-NC675P

RMT-D168A/D168P

SERVICE MANUAL

US Model
Canada Model
Latin Model
Mexico Model
General Area Model
Australia Model

Photo : DVP-NC675P (SILVER)
RMT-D168A

SPECIFICATIONS

System
Laser: Semiconductor laser
Signal format system: NTSC

Audio characteristics
Frequency response: DVD VIDEO (PCM 96 kHz): 2 Hz to 44 kHz (±1.0 dB)/ DVD VIDEO (PCM 48 kHz): 2 Hz to 22 kHz (±0.5 dB)/CD: 2 Hz to 20 kHz (±0.5 dB)
Signal-to-noise ratio (S/N ratio): 115 dB (LINE OUT L/R (AUDIO) jack only)
Harmonic distortion: 0.003%
Dynamic range: DVD VIDEO: 103 dB/ CD:99 dB
Wow and flutter: Less than detected value (±0.001% W PEAK)

The signals from LINE OUT L/R (AUDIO) jack are measured. When you play PCM sound tracks with a 96 kHz sampling frequency, the output signals from the DIGITAL OUT (COAXIAL or OPTICAL) jack are converted to 48 kHz sampling frequency.

Outputs
(Jack name: Jack type/Output level/Load impedance)
LINE OUT L/R (AUDIO): Phono jack/ 2 Vrms/10 kilohms
DIGITAL OUT (OPTICAL): Optical output jack/–18 dBm (wave length: 660 nm)
DIGITAL OUT (COAXIAL): Phono jack/0.5 Vp-p/75 ohms
COMPONENT VIDEO OUT (Y,PB,PR): Phono jack/Y: 1.0 Vp-p/PB,PR.: 0.65 Vp-p/75 ohms
LINE OUT (VIDEO): Phono jack/ 1.0 Vp-p/75 ohms
S VIDEO OUT: 4-pin mini DIN/ Y: 1.0Vp-p/C: 0.286 Vp-p/75 ohms

General
Power requirements:
120V AC, 60Hz (US, CND, MX)*
110 - 240 V AC, 50/60 Hz (E, SP, AUS)*
Power consumptions:
13 W (US, CND, MX)*
12 W (E, SP, AUS)*
Dimensions (approx.):
430 × 83 × 411.7 mm
(17 × 3 1/64 × 16 1/32 in.) (width/height/ depth) incl. projecting parts
Mass (approx.): 4.5 kg (10 1b)
Operating temperature: 5°C to 35°C (41°F to 95°F)
Operating humidity: 25% to 80%

Supplied accessories
See Page 1-3 (Instruction manual page 17)

Specifications and design are subject to change without notice.

ENERGY STAR® is a U.S. registered mark. As an ENERGY STAR® Partner, Sony Corporation has determined that this product meets the ENERGY STAR® guidelines for energy efficiency.
*Refer page 7-6 for Abbreaviation

CD/DVD PLAYER

SONY®

SAFETY CHECK-OUT

After correcting the original service problem, perform the following safety checks before releasing the set to the customer.

1. Check the area of your repair for unsoldered or poorly-soldered connections. Check the entire board surface for solder splashes and bridges.
2. Check the interboard wiring to ensure that no wires are "pinched" or contact high-wattage resistors.
3. Look for unauthorized replacement parts, particularly transistors, that were installed during a previous repair. Point them out to the customer and recommend their replacement.
4. Look for parts which, though functioning, show obvious signs of deterioration. Point them out to the customer and recommend their replacement.
5. Check the line cord for cracks and abrasion.
   Recommend the replacement of any such line cord to the customer.
6. Check the B+ voltage to see it is at the values specified.
7. Check the antenna terminals, metal trim, "metallized" knobs, screws, and all other exposed metal parts for AC leakage. Check leakage as described below.

: LEAD FREE MARK

Unleaded solder has the following characteristics.

- Unleaded solder melts at a temperature about 40°C higher than ordinary solder.
  Ordinary soldering irons can be used but the iron tip has to be applied to the solder joint for a slightly longer time.
  Soldering irons using a temperature regulator should be set to about 350°C.
  Caution: The printed pattern (copper foil) may peel away if the heated tip is applied for too long, so be careful!
- Strong viscosity
  Unleaded solder is more viscous (sticky, less prone to flow) than ordinary solder so use caution not to let solder bridges occur such as on IC pins, etc.
- Usable with ordinary solder
  It is best to use only unleaded solder but unleaded solder may also be added to ordinary solder.

WARNING!!

WHEN SERVICING, DO NOT APPROACH THE LASER EXIT WITH THE EYE TOO CLOSELY. IN CASE IT IS NECESSARY TO CONFIRM LASER BEAM EMISSION, BE SURE TO OBSERVE FROM A DISTANCE OF MORE THAN 25 cm FROM THE SURFACE OF THE OBJECTIVE LENS ON THE OPTICAL PICK-UP BLOCK.

CAUTION:

The use of optical instrument with this product will increase eye hazard.

CAUTION

Use of controls or adjustments or performance of procedures other than those specified herein may result in hazardous radiation exposure.

SAFETY-RELATED COMPONENT WARNING!!

COMPONENTS IDENTIFIED BY MARK ⚠ OR DOTTED LINE WITH MARK ⚠ ON THE SCHEMATIC DIAGRAMS AND IN THE PARTS LIST ARE CRITICAL TO SAFE OPERATION. REPLACE THESE COMPONENTS WITH SONY PARTS WHOSE PART NUMBERS APPEAR AS SHOWN IN THIS MANUAL OR IN SUPPLEMENTS PUBLISHED BY SONY.

LEAKAGE TEST

The AC leakage from any exposed metal part to earth ground and from all exposed metal parts to any exposed metal part having a return to chassis, must not exceed 0.5mA (500 microampers). Leakage current can be measured by any one of three methods.

1. A commercial leakage tester, such as the Simpson 229 or RCA TW-540A. Follow the manufacturers' instructions to use these instruments.
2. A battery-operated AC milliammeter. The Data Precision 245 digital multimeter is suitable for this job.
3. Measuring the voltage drop across a resistor by means of a VOM or battery-operated AC voltmeter. The "limit" indication is 0.75V, so analog meters must have an accurate low voltage scale. The Simpson 250 and Sanwa SH-63Trd are examples of a passive VOM that is suitable. Nearly all battery operated digital multimeters that have a 2V AC range are suitable. (See Fig. A)

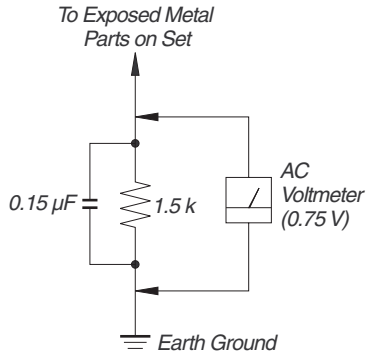

Fig. A. Using an AC voltmeter to check AC leakage.

Unleaded solder

Boards requiring use of unleaded solder are printed with the lead-free mark (LF) indicating the solder contains no lead.
(Caution: Some printed circuit boards may not come printed with the lead free mark due to their particular size.)

ATTENTION AU COMPOSANT AYANT RAPPORT À LA SÉCURITÉ!

LES COMPOSANTS IDENTIFÉS PAR UNE MARQUE ⚠ SUR LES DIAGRAMMES SCHÉMATIQUES ET LA LISTE DES PIÈCES SONT CRITIQUES POUR LA SÉCURITÉ DE FONCTIONNEMENT. NE REMPLACER CES COMPOSANTS QUE PAR DES PIÈSES SONY DONT LES NUMÉROS SONT DONNÉS DANS CE MANUEL OU DANS LES SUPPÉMENTS PUBLIÉS PAR SONY.

TABLE OF CONTENTS

SERVICE NOTE

1. Note on Removing the Upper Case 5
2. Disc Removal Procedure 5
3. Note on Removing the Table Ass'y 5
4. Note on Mounting the Gears 6
5. Caution Point on the PWB IF-114 6

1. GENERAL

Precautions 1-1
About this Manual 1-1
This Player Can Play the Following Discs 1-1
Index to Parts and Controls 1-1
Guide to the Control Menu Display 1-2
Hookups 1-3
Hooking Up the Player 1-3
Step 1: Unpacking 1-3
Step 2: Inserting Batteries into the Remote 1-3
Step 3: Connecting the Video Cords 1-3
Step 4: Connecting the Audio Cords 1-4
Step 5: Connecting the Power Cord 1-5
Step 6: Quick Setup 1-5
Playing Discs 1-6
Playing Discs 1-6
Resuming Playback from the Point Where You Stopped the Disc (Multi-disc Resume) 1-7
Using the DVD's Menu 1-7
Selecting "ORIGINAL" or "PLAY LIST" on a DVD-RW Disc 1-7
Playing VIDEO CDs with PBC Functions (PBC Playback) 1-7
Various Play Mode Functions (Program Play, Shuffle Play, Repeat Play, A-B Repeat Play) 1-7
Searching for a Scene 1-9
Searching for a Particular Point on a Disc (Search, Scan, Slow-motion Play, Freeze Frame) ... 1-9
Searching for a Title/Chapter/Track/Index/Scene, etc. 1-9
Searching by Scene (Picture Navigation) 1-9
Viewing Information About the Disc 1-10
Checking the Playing Time and Remaining Time 1-10
Sound Adjustments 1-10
Changing the Sound 1-10
TV Virtual Surround Settings (TVS) 1-11
Enjoying Movies 1-11
Changing the Angles 1-11
Displaying the Subtitles 1-11
Adjusting the Playback Picture (CUSTOM PICTURE MODE) 1-11
Sharpening the Outline of an Image (SHARPNESS) 1-12
Playing a DATA CD 1-12
About MP3 Audio Tracks and JPEG Image Files 1-12
Playing DATA CDs with MP3 Audio Track and JPEG Image Files 1-12
Specifying the slideshow duration 1-13
Selecting an effect for image files in the slideshow .. 1-13
Using Various Additional Functions 1-14
Locking Discs (CUSTOM PARENTAL CONTROL, PARENTAL CONTROL) 1-14
Controlling Your TV with the Supplied Remote 1-14
Settings and Adjustments 1-15
Using the Setup Display 1-15
Setting the Display or Sound Track Language (LANGUAGE SETUP) 1-15
Settings for the Display (SCREEN SETUP) 1-16
Custom Settings (CUSTOM SETUP) 1-16
Settings for the Sound (AUDIO SETUP) 1-16
Additional Information 1-16
Troubleshooting 1-16
Self-diagnosis Function (When letters/numbers appear in the display) 1-17
Glossary 1-17
Language Code List 1-18

2. DISASSEMBLY

2-1. Disassembly 2-1
2-2. Upper Case 2-1
2-3. Front Panel Section 2-2
2-4. Rear Panel Section 2-2
2-5. MV-044 Board 2-3
2-6. IF-114 Board 2-3
2-7. Table Ass'y 2-4
2-8. Loading Motor Ass'y 2-5
2-9. Optical Pick-Up 2-5
2-10. Power Block 2-6
2-11. IF-114 and FR-218 Boards 2-6
2-12. Internal Views 2-7
2-13. Circuit Boards Location 2-8

3. BLOCK DIAGRAMS

3-1. Overall Block Diagram 3-1
3-2. System Control/Signal Processor Block Diagram 3-3
3-3. RF/Servo Block Diagram 3-5
3-4. Audio Block Diagram 3-7
3-5. Video Block Diagram 3-9
3-6. Interface Control Block Diagram 3-11
3-7. Power Block Diagram 3-13

4. PRINTED WIRING BOARDS AND SCHEMATIC DIAGRAMS

4-1. Frame Schematic Diagram 4-1
4-2. Printed Wiring Boards and Schematic Diagram 4-3
Waveforms 4-4
• MV-044 Printed Wiring Board 4-5
• MV-044 (Drive) Schematic Diagram 4-7
• MV-044 (CPU, Servo-DSP, AVDEC) Schematic Diagram 4-9
• MV-044 (Video) Schematic Diagram 4-11
• MV-044 (Audio) Schematic Diagram 4-13
• MV-044 (PS Through) Schematic Diagram 4-15
• IF-114 (If Com) Printed Wiring Board 4-17
• IF-114 (If Com) Schematic Diagram 4-19
• SW-423 (Switch) Printed Wiring Board 4-21
• SW-423 (Switch) Schematic Diagram 4-23
• FR-218 (Function SW) Printed Wiring Board ... 4-25
• FR-218 (Function SW) Schematic Diagram 4-27
• SE-145 (Sensor), MD-105 (MD Interface) Printed Wiring Board 4-29
• SE-145 (Sensor), MD-105 (MD Interface) Schematic Diagram 4-31
• Power Block (SRV1487UC) Printed Wiring Board 4-33
• Power Block (SRV1487UC) Schematic Diagram 4-35
• Power Block (SRV1501WW) Printed Wiring Board 4-37
• Power Block (SRV1501WW) Schematic Diagram 4-39

5. IC PIN FUNCTION DESCRIPTION

5-1. System Control Pin Function
(MV-044 Board IC201) 5-1

6. TEST MODE

6-1. General Description 6-1
6-2. Starting Test Mode 6-1
6-3. Drive Manual Operation 6-1
6-4. Mirror Time Adjustment 6-1
6-5. Executing IOP Measurement 6-3
6-6. If Con Self Diagnostic Function 6-4
6-7. Troubleshooting 6-10
6-8. Mechanism Test Mode Adjustment 6-13

7. REPAIR PARTS LIST

7-1. Exploded Views 7-1
7-1-1. Overall Section 7-2
7-1-2. Front Panel Section 7-3
7-1-3. Loading Section 7-4
7-1-4. Chassis Section 7-5
7-2. Electrical Parts List 7-6

SERVICE NOTE

1. NOTE ON REMOVING THE UPPER CASE

1) Remove the two tapping screws and three screws. (See Fig. 1)
2) Open the sides of case. (See Fig. 1)
3) Remove the upper case in the direction of the arrow Ⓐ. (See Fig. 1)

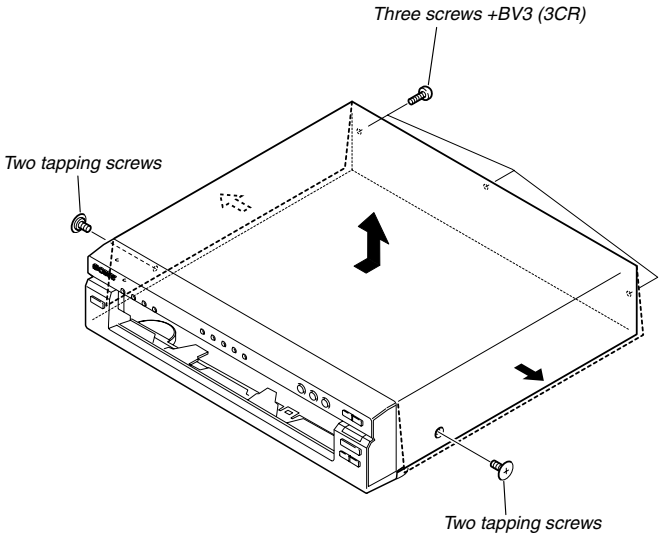

Fig. 1.

2. DISC REMOVAL PROCEDURE

1) Insert a flat-head (-) screwdriver into a hole at the bottom, and rotate the cam gear in the direction of the arrow Ⓐ. (See Fig.2)

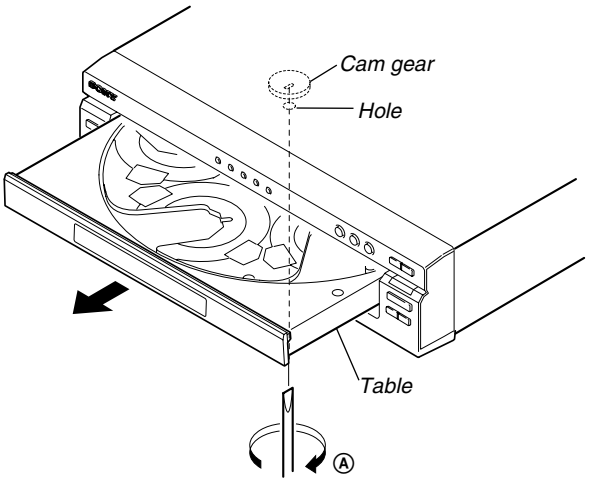

Fig. 2.

3. NOTE ON REMOVING THE TABLE ASS'Y

1) Remove the two screws. (See Fig. 3)

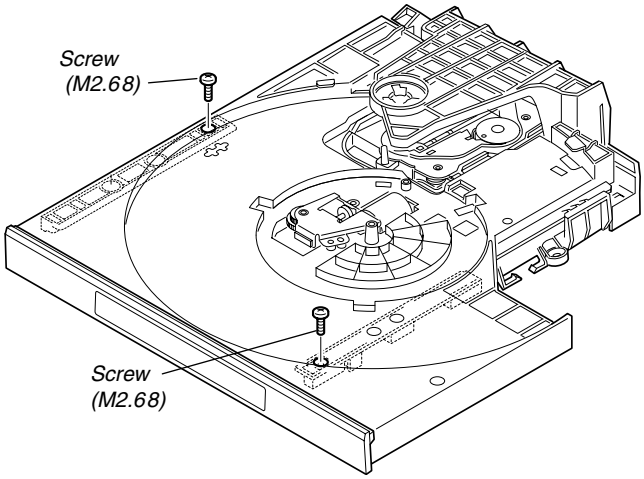

Fig. 3.

2) Remove the two Plates (guide) in the direction of the arrows Ⓐ and Ⓑ. (See Fig. 4)
3) Remove the Table ass'y in the direction of the arrow Ⓒ. (See Fig. 4)
4) Remove the Flexible flat cable (See Fig. 4).

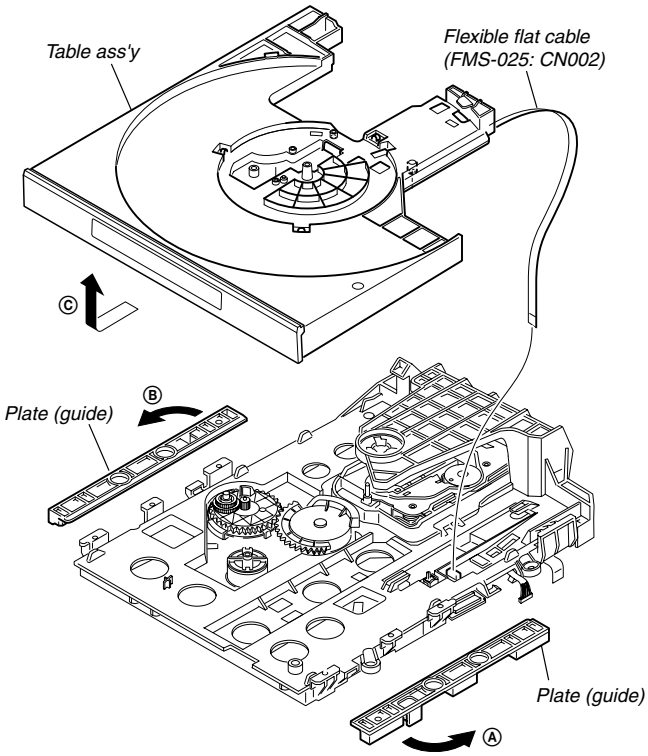

Fig. 4.

4. NOTE ON MOUNTING THE GEARS

1) Mount the gear (chuck). (See Fig. 5)
2) Rotate the gear (chuck) in the direction of the arrow. (down position) (See Fig. 5)

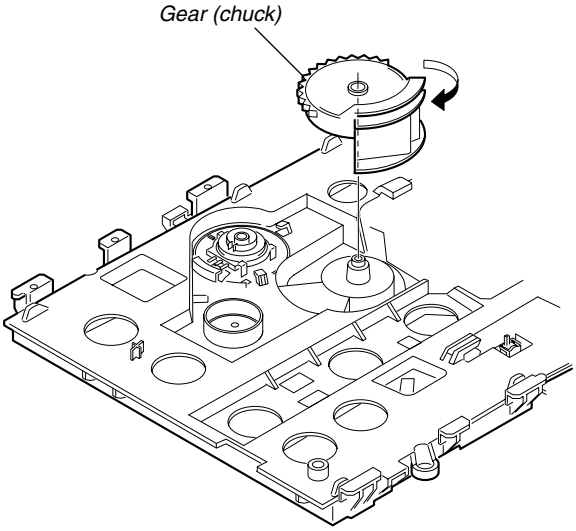

Fig. 5.

3) Connect the boss of the gear (swing) with the groove of the rotary encoder and mount the gear (swing). (See Fig. 6)
4) Align triangle mark of the chassis with the groove of the gear (swing). (See Fig. 6)

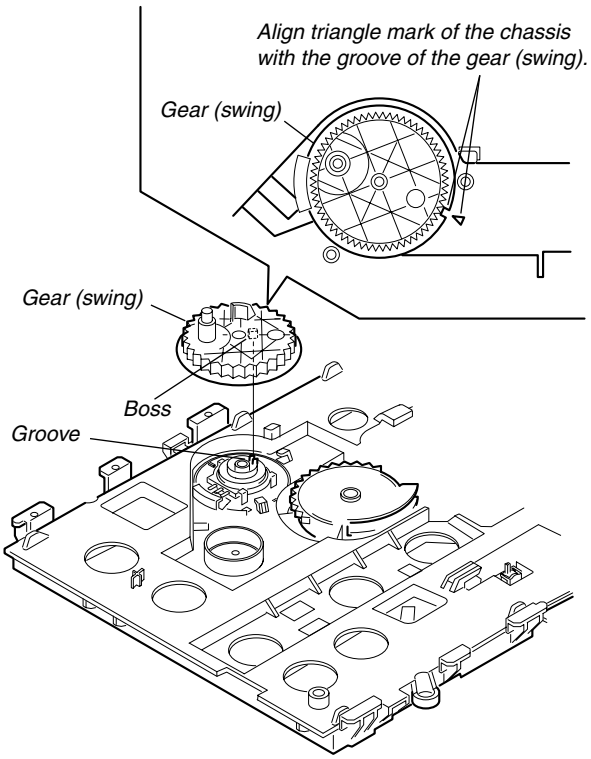

Fig. 6.

5) Mount the while aligning the engagement of the gear (swing) and the gear (chuck). (See Fig. 7)

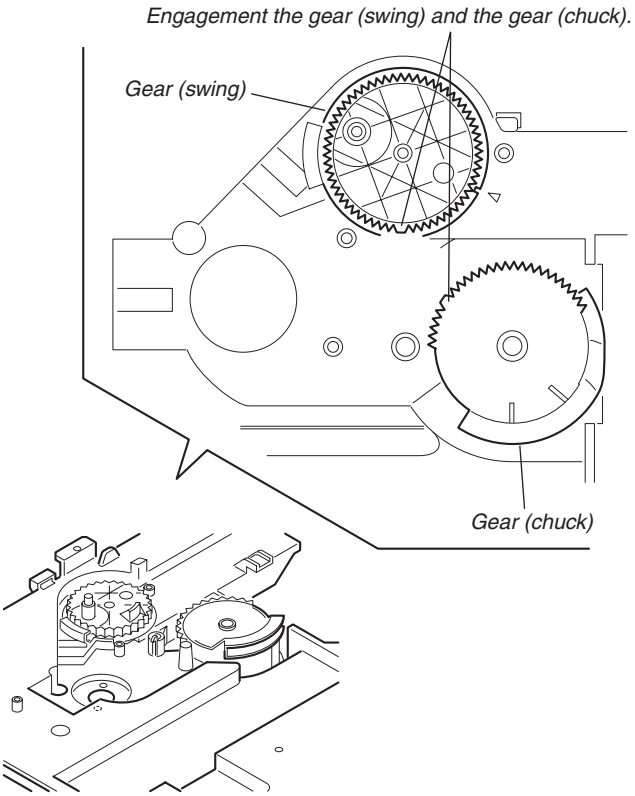

Fig. 7.

5. Caution Point on the PWB IF-114

CAUTION
When handling IF-114 PWB avoid contact with the sharp metal edge on the top side of Vacuum Fluorescent Display (ND401).

SECTION 1
GENERAL

This section is extracted from instruction manual. (DVP-NC675P : 3-091-202-11)

Precautions

On safety
- Caution – The use of optical instruments with this product will increase eye hazard.
- To prevent fire or shock hazard, do not place objects filled with liquids, such as vases, on the apparatus.
- Should any solid object or liquid fall into the cabinet, unplug the player and have it checked by qualified personnel before operating it any further.

On power sources
- The player is not disconnected from the AC power source as long as it is connected to the wall outlet, even if the player itself has been turned off.
- If you are not going to use the player for a long time, be sure to disconnect the player from the wall outlet. To disconnect the AC power cord, grasp the plug itself; never pull the cord.

On placement
- Place the player in a location with adequate ventilation to prevent heat build-up in the player.
- Do not place the player on a soft surface such as a rug that might block the ventilation holes.
- Do not place the player in a location near heat sources, or in a place subject to direct sunlight, excessive dust, or mechanical shock.
- Do not install the player in an inclined position. It is designed to be operated in a horizontal position only.
- Do not place heavy objects on the player.

On operation
- If the player is brought directly from a cold to a warm location, or is placed in a very damp room, moisture may condense on the lenses inside the player. Should this occur, the player may not operate properly. In this case, remove the disc and leave the player turned on for about half an hour until the moisture evaporates.
- When you move the player, take out any discs. If you don't, the disc may be damaged.

On adjusting volume
Do not turn up the volume while listening to a section with very low level inputs or no audio signals. If you do, the speakers may be damaged when a peak level section is played.

On cleaning
Clean the cabinet, panel, and controls with a soft cloth slightly moistened with a mild detergent solution. Do not use any type of abrasive pad, scouring powder or solvent such as alcohol or benzine.

On cleaning discs
Do not use a commercially available cleaning disc. It may cause a malfunction.

IMPORTANT NOTICE
Caution: This player is capable of holding a still video image or on-screen display image on your television screen indefinitely. If you leave the still video image or on-screen display image displayed on your TV for an extended period of time you risk permanent damage to your television screen. Plasma Display Panel television and projection televisions are especially susceptible to this.

On transporting the player
Before transporting the player, follow the procedure below to return the internal mechanisms to their original positions.

1. Remove all the discs from the disc tray.
2. Press ⏏ to close the disc tray.
   Make sure that "NO DISC" appears on the front panel display.
3. Press I/⏻ to turn off the player.
   The player enters standby mode.
4. Disconnect the AC power cord.

If you have any questions or problems concerning your player, please consult your nearest Sony dealer.

About this Manual

- Instructions in this manual describe the controls on the remote. You can also use the controls on the player if they have the same or similar names as those on the remote.
- "DVD" may be used as a general term for DVD VIDEOs, DVD+RWs/DVD+Rs and DVD-RWs/DVD-Rs.
- The meaning of the icons used in this manual is described below:

Icon	Meaning
DVD-V	Functions available for DVD VIDEOs and DVD+RWs/DVD+Rs or DVD-RWs/DVD-Rs in video mode
DVD-RW	Functions available for DVD-RWs in VR (Video Recording) mode
VCD	Functions available for VIDEO CDs, Super VCDs or CD-Rs/CD-RWs in video CD format or Super VCD format
DATA CD	Functions available for DATA CDs (CD-ROMs/CD-Rs/CD-RWs containing MP3* audio tracks and JPEG image files)
CD	Functions available for music CDs or CD-Rs/CD-RWs in music CD format

* MP3 (MPEG1 Audio Layer 3) is a standard format defined by ISO (International Organization for Standardization)/MPEG which compresses audio data.

This Player Can Play the Following Discs

Format of discs	
DVD VIDEO (page 73)	DVD VIDEO
DVD-RW (page 73)	DVD RW
VIDEO CD	COMPACT disc DIGITAL VIDEO
Music CD	COMPACT disc DIGITAL AUDIO

"DVD VIDEO" and "DVD-RW" are trademarks.

Note about CDs
The player can play the following discs:
CD ROMs/CD-Rs/CD-RWs recorded in the following formats:
- music CD format
- video CD format
- MP3 audio tracks and JPEG image files of format conforming to ISO9660* Level 1/ Level 2, or its extended format, Joliet
- KODAK Picture CD format

* A logical format of files and folders on CD-ROMs, defined by ISO (International Organization for Standardization).

Region code
Your player has a region code printed on the back of the unit and only will play DVD VIDEO discs (playback only) labeled with identical region codes. This system is used to protect copyrights.

DVD VIDEOs labeled (2) will also play on this player.

If you try to play any other DVD VIDEO, the message "Playback prohibited by area limitations." will appear on the TV screen. Depending on the DVD VIDEO, no region code indication may be labeled even though playing the DVD VIDEO is prohibited by area restrictions.

Example of discs that the player cannot play

The player cannot play the following discs:
- All CD-ROMs (including PHOTO CDs)/ CD-Rs/CD-RWs other than those recorded in the format listed on the previous page.
- Data part of CD-Extras
- DVD-ROMs
- DVD Audio discs
- HD layer on Super Audio CDs

* A logical format of files and folders on CD-ROMs defined by ISO (International Standard Organization).

Also, the player cannot play the following discs:
- A DVD VIDEO with a different region code.
- A disc recorded in a color system other than NTSC, such as PAL or SECAM (this player conforms to the NTSC color system).
- A disc that has a non-standard shape (e.g., card, heart).
- A disc with paper or stickers on it.
- A disc that has the adhesive of cellophane tape or a sticker still left on it.

Notes

- **Notes about DVD+RWs/DVD+Rs, DVD-RWs/ DVD-Rs or CD-Rs/CD-RWs**
  Some DVD+RWs/DVD+Rs, DVD-RWs/DVD-Rs or CD-Rs/CD-RWs cannot be played on this player due to the recording quality or physical condition of the disc, or the characteristics of the recording device and authoring software.
  The disc will not play if it has not been correctly finalized. For more information, see the operating instructions for the recording device. Note that some playback functions may not work with some DVD+RWs/DVD+Rs, even if they have been correctly finalized. In this case, view the disc by normal playback. Also some DATA CDs created in Packet Write format cannot be played.
- **Music discs encoded with copyright protection technologies**
  This product is designed to playback discs that conform to the Compact Disc (CD) standard. Recently, various music discs encoded with copyright protection technologies are marketed by some record companies. Please be aware that among those discs, there are some that do not conform to the CD standard and may not be playable by this product.

Note on playback operations of DVDs and VIDEO CDs

Some playback operations of DVDs and VIDEO CDs may be intentionally set by software producers. Since this player plays DVDs and VIDEO CDs according to the disc contents the software producers designed, some playback features may not be available. Also, refer to the instructions supplied with the DVDs or VIDEO CDs.

Copyrights
This product incorporates copyright protection technology that is protected by U.S. patents and other intellectual property rights. Use of this copyright protection technology must be authorized by Macrovision, and is intended for home and other limited viewing uses only unless otherwise authorized by Macrovision. Reverse engineering or disassembly is prohibited.

Notes about the Discs

- To keep the disc clean, handle the disc by its edge. Do not touch the surface.

- Do not expose the disc to direct sunlight or heat sources such as hot air ducts, or leave it in a car parked in direct sunlight as the temperature may rise considerably inside the car.
- After playing, store the disc in its case.
- Clean the disc with a cleaning cloth. Wipe the disc from the center out.

- Do not use solvents such as benzine, thinner, commercially available cleaners, or anti-static spray intended for vinyl LPs.

Index to Parts and Controls

For more information, refer to the pages indicated in parentheses.

Front panel

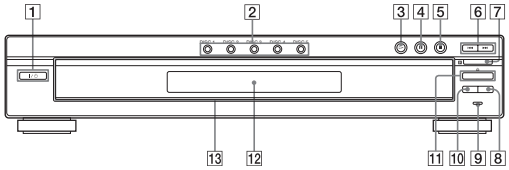

1. I/⏻ (on/standby) button (28)
2. DISC SELECT DISC 1 – DISC 5 buttons (29)
3. ▷ (playback) button (28)
   The ▷ button has a tactile dot.*
4. ❚❚ (pause) button (29)
5. ■ (stop) button (29)
6. ⏮/⏭ (previous/next) buttons (29)
7. (remote sensor) (17)
8. DISC SKIP button (28)
9. PROGRESSIVE indicator (19)
   Lights up when the player outputs progressive signals
10. EXCHANGE button (30)
11. ⏏ (open/close) button (28)
12. Front panel display (11)
13. Disc tray (28)

* Use the tactile dot as a reference when operating the player.

Front panel display

When playing back a DVD VIDEO/DVD-RW

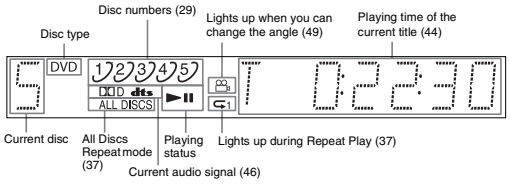

When playing back a VIDEO CD with Playback Control (PBC) (33)

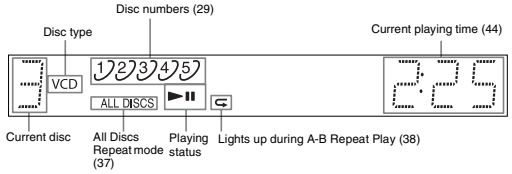

When playing back a CD, DATA CD (MP3 audio), or VIDEO CD (without PBC)

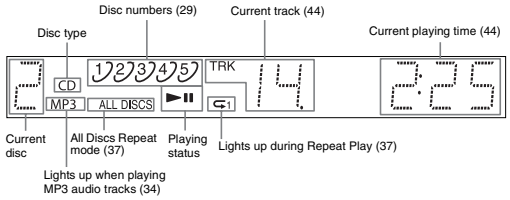

→ continued

Rear panel

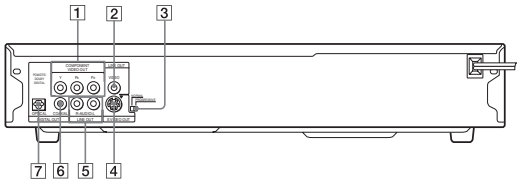

1 COMPONENT VIDEO OUT (Y, PB, PR) jacks* (18)
2 LINE OUT (VIDEO) jack** (18)
3 NORMAL/PROGRESSIVE switch (67)
4 S VIDEO OUT jack** (18)
5 LINE OUT L/R (AUDIO) jack (21) (22) (23)
6 DIGITAL OUT (COAXIAL) jack (22) (23) (24)
7 DIGITAL OUT (OPTICAL) jack (22) (23) (24)

* Set the NORMAL/PROGRESSIVE switch to PROGRESSIVE if you have connected a progressive signal compatible TV to the player (page 67, 70).
**Only set NORMAL/PROGRESSIVE switch to NORMAL if you have connected the NORMAL TV to these jacks (page 67).

Remote

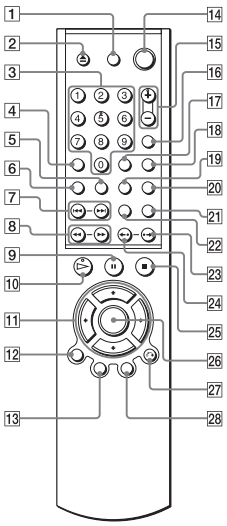

1 TV I/⏻ (on/standby) button (63)
2 ⏏ OPEN/CLOSE button (28)
3 Number buttons (32)
The number 5 button has a tactile dot.*
4 CLEAR button (34)
5 SUBTITLE button (49)
6 AUDIO button (46)
7 ⏮/⏭ PREV (previous)/NEXT (next) buttons (29)
8 ◀II ◀◀/II▶ ▶▶ SCAN/SLOW buttons (39)
9 II PAUSE button (29)
10 ▷ PLAY button (28)
The ▷ button has a tactile dot.*
11 ←/↑/↓/→ buttons (32)
12 DISPLAY button (14)
13 TOP MENU button (32)
14 I/⏻ (on/standby) button (28)
15 VOL (volume) +/– buttons (63)
The + button has a tactile dot.*
16 TV/VIDEO button (63)
17 TIME/TEXT button (43)
18 DISC SKIP button (28)
19 ANGLE button (49)
20 SUR (surround) button (47)
21 PICTURE NAVI (picture navigation) button (42, 53)
22 ZOOM button (53)
23 •→/II▶ INSTANT ADVANCE/STEP button (29, 39)
24 ←•/◀II INSTANT REPLAY/STEP button (29, 39)
25 ■ STOP button (29)
26 ENTER button (25)
27 ↩ RETURN button (30)
28 MENU button (32) (34)

* Use the tactile dot as a reference when operating the player.

Guide to the Control Menu Display

Use the Control Menu to select a function and to view related information. Press DISPLAY repeatedly to turn on or change the Control Menu display as follows:

Control Menu display 1
↓
Control Menu display 2 (Except DVD-RW and CD)
↓
Control Menu display off

Control Menu

The Control Menu display 1 and 2 will show different items depending on the disc type. For details, please refer to the pages in parentheses.

Example: Control Menu display 1 when playing a DVD VIDEO

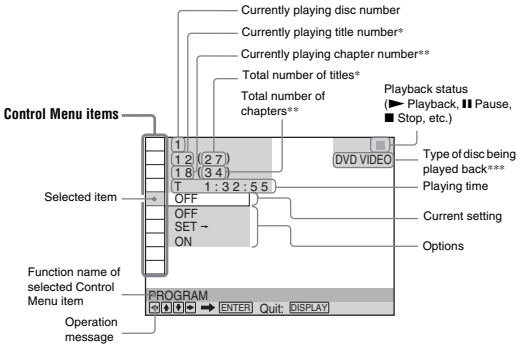

* Displays the scene number for VIDEO CDs (PBC is on), track number for VIDEO CDs/CDs, album number for DATA CDs.
** Displays the index number for VIDEO CDs/CDs, MP3 audio track number for DATA CDs.
*** Displays Super VCD as "SVCD."

To turn off the display

Press DISPLAY repeatedly.

List of Control Menu Items

Item	Item Name, Function, Relevant Disc Type
	DISC (page 40) Selects the disc to be played. DVD-V DVD-RW VCD CD DATA CD
	TITLE (page 40)/SCENE (page 40)/TRACK (page 40) Selects the title, scene, or track to be played. DVD-V DVD-RW VCD
	CHAPTER (page 40)/INDEX (page 40) Selects the chapter or index to be played. DVD-V DVD-RW VCD
	ALBUM (page 40) Selects the album to be played. DATA CD
	DATE (page 40) Displays the recorded date, etc of the current JPEG image. DATA CD
	FILE (page 40) Selects the JPEG image file to be played. DATA CD
	TRACK (page 40) Selects the track to be played. CD DATA CD
	TIME/TEXT (page 40) Checks the elapsed time and the remaining playback time. Input the time code for picture and music searching. Displays the DVD/CD text or the DATA CD's track name. DVD-V DVD-RW VCD CD DATA CD
	ORIGINAL/PLAY LIST (page 32) Selects the type of titles (DVD-RW) to be played, the ORIGINAL one, or an edited PLAY LIST. DVD-RW
	PROGRAM (page 34) Selects the disc, title, chapter, or track to play in the order you want. DVD-V VCD CD
	SHUFFLE (page 36) Plays the disc, title, chapter, or track in random order. DVD-V VCD CD
	REPEAT (page 37) Plays the entire disc (all titles/all tracks/all albums) repeatedly or one title/chapter/track/album repeatedly. DVD-V DVD-RW VCD CD DATA CD
	A-B REPEAT (page 38) Specifies the parts you want to play repeatedly. DVD-V DVD-RW VCD CD
	CUSTOM PICTURE MODE (page 50) Adjust the video signal from the player. You can select the picture quality that best suits the program you are watching. DVD-V DVD-RW VCD
	SHARPNESS (page 51) Exaggerates the outline of the image to produce a sharper picture. DVD-V DVD-RW VCD DATA CD

→ continued

	MODE (MP3, JPEG) (page 55) Selects the data type; MP3 audio track (AUDIO), JPEG image file (IMAGE) or both (AUTO) to be played when playing a DATA CD. DATA CD
	INTERVAL (page 57) Specifies the duration for which the slides are displayed on the screen. DATA CD
	EFFECT (page 58) Selects the effect to be used when viewing the slideshow. DATA CD
	PARENTAL CONTROL (page 59) Set to prohibit playback on this player. DVD-V VCD CD
	SETUP (page 64) QUICK Setup (page 25) Use Quick Setup to choose the desired language of the on-screen display, the aspect ratio of the TV and the audio output signals. CUSTOM Setup In addition to the Quick Setup setting, you can adjust other various settings. RESET Returns the settings in "SETUP" to the default setting. DVD-V DVD-RW VCD CD DATA CD

Hint

The Control Menu icon indicator lights up in green → when you select any item except "OFF." ("PROGRAM," "SHUFFLE," "REPEAT," "A-B REPEAT," "SHARPNESS" only). The "ORIGINAL/PLAYLIST" indicator lights up in green when "PLAYLIST" is selected.

Hooking Up the Player

Follow Steps 1 to 6 to hook up and adjust the settings of the player.

Notes

- Plug cords securely to prevent unwanted noise.
- Refer to the instructions supplied with the components to be connected.
- You cannot connect this player to a TV that does not have a video input jack.
- Be sure to disconnect the power of each component before connecting.

Step 1: Unpacking

Check that you have the following items:
- Audio/video cord (pinplug × 3 ⟷ pinplug × 3) (1)
- Remote commander (remote) (1)
- Size AA (R6) batteries (2)

Step 2: Inserting Batteries into the Remote

You can control the player using the supplied remote. Insert two Size AA (R6) batteries by matching the ⊕ and ⊖ ends on the batteries to the markings inside the compartment. When using the remote, point it at the remote sensor ⊡ on the player.

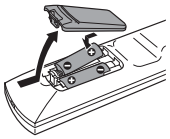

Notes

- Do not leave the remote in an extremely hot or humid place.
- Do not drop any foreign object into the remote casing, particularly when replacing the batteries.
- Do not expose the remote sensor to direct light from the sun or a lighting apparatus. Doing so may cause a malfunction.
- If you do not use the remote for an extended period of time, remove the batteries to avoid possible damage from battery leakage and corrosion.

→ continued

Step 3: Connecting the Video Cords

Connect this player to your TV monitor, projector, or AV amplifier (receiver) using a video cord. Select one of the patterns Ⓐ through Ⓒ. In order to view progressive signal (480p) pictures with a compatible TV, projector, or monitor, you must use connection Ⓒ, according to the input jack on your TV monitor, projector, or AV amplifier (receiver).

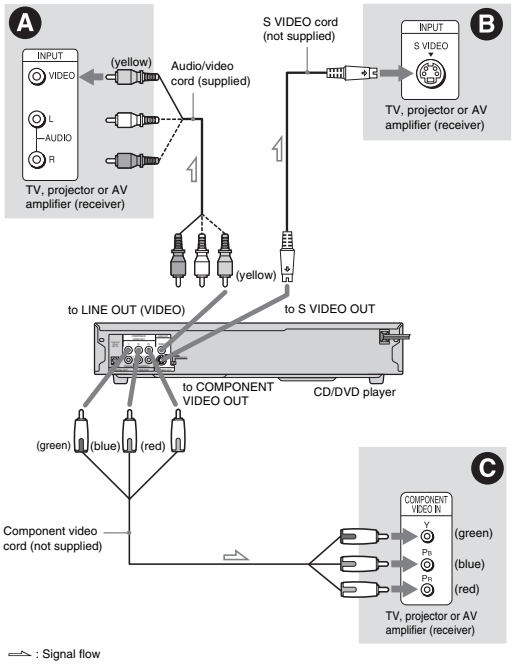

Ⓐ If you are connecting to a video input jack

Connect the yellow plug of the audio/video cord (supplied) to the yellow (video) jacks. You will enjoy standard quality images.

Use the red and white plugs to connect to the audio input jacks (page 21). (Do this if you are connecting to a TV only.)

Ⓑ If you are connecting to an S VIDEO input jack

Connect an S VIDEO cord (not supplied). You will enjoy high quality images.

Ⓒ If you are connecting to a monitor, projector, or AV amplifier (receiver) having component video input jacks (Y/PB/PR)

Connect the component via the COMPONENT VIDEO OUT jacks using a component video cord (not supplied) or three video cords (not supplied) of the same kind and length. You will enjoy accurate color reproduction and high quality images. If your TV accepts progressive (480p) format signals, you must use this connection and set NORMAL/PROGRESSIVE switch to PROGRESSIVE (page 67). The PROGRESSIVE indicator lights up when the player outputs progressive signals.

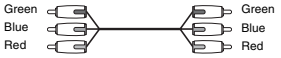

When connecting to a wide screen TV

Depending on the disc, the image of some discs may not fit your TV screen. If you want to change the aspect ratio, please refer to page 66.

Notes

- Connect the player directly to the TV. If you pass the player signals via the VCR, you may not receive a clear image on the TV screen.

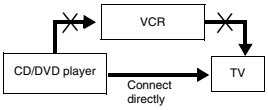

- Consumers should note that not all high definition television sets are fully compatible with this product and may cause artifacts to be displayed in the picture. In the case of 480 progressive scan picture problems, it is recommended that you switches the connection to the standard definition output. If there are questions regarding your Sony TV set's compatibility with this model 480p DVD player, please contact our customer service center.

→ continued

Step 4: Connecting the Audio Cords

Refer to the chart below to select the connection that best suits your system. Be sure to also read the instructions for the components you wish to connect.

Select a connection

Select one of the following connections, Ⓐ through Ⓓ.

Components to be connected	Connection	Your setup
TV	Ⓐ (page 21)	Example
Stereo amplifier (receiver) and two speakers or MD deck/DAT deck	Ⓑ (page 22)	Example 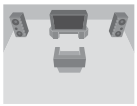
AV amplifier (receiver) having a Dolby* Surround (Pro Logic) decoder and 3 to 6 speakers	Ⓒ (page 23)	Example 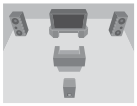
AV amplifier (receiver) with a digital input jack having a Dolby Digital or DTS** decoder and 6 speakers	Ⓓ (page 24)	Example 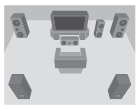

Hint

If you connect an AV amplifier (receiver) that conforms to the 96 kHz sampling frequency, use connection Ⓓ.

* Manufactured under license from Dolby Laboratories. "Dolby," "Pro Logic," and the double-D symbol are trademarks of Dolby Laboratories.

** "DTS" and "DTS Digital Out" are trademarks of Digital Theater Systems, Inc.

Ⓐ Connecting to your TV

This connection will use your TV's speakers for sound.

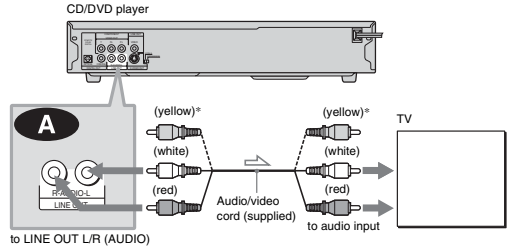

: Signal flow

* The yellow plug is used for video signals (page 18).

Hint

When connecting to a monaural TV, use a stereo-mono conversion cord (not supplied). Connect the LINE OUT L/R (AUDIO) jacks to the TV's audio input jack.

→ continued

Ⓑ Connecting to a stereo amplifier (receiver) and 2 speakers/Connecting to an MD deck or DAT deck

If the stereo amplifier (receiver) has audio input jacks L and R only, use B-1. If the amplifier (receiver) has a digital input jack, or when connecting to an MD deck or DAT deck, use B-2. In this case, you can also connect the player directly to the MD deck or DAT deck without using your stereo amplifier (receiver).

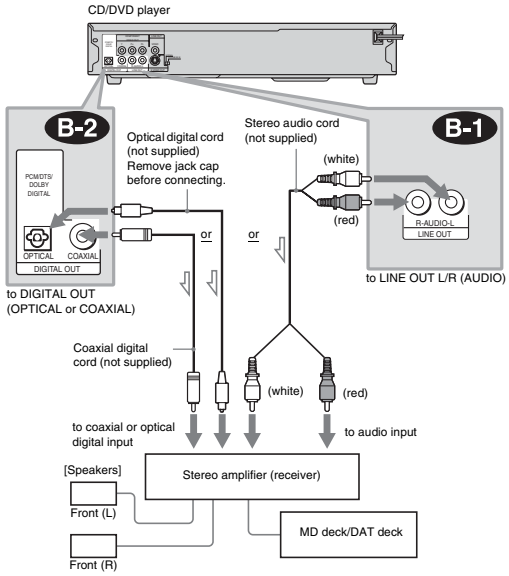

: Signal flow

C Connecting to an AV amplifier (receiver) having a Dolby Surround (Pro Logic) decoder and 3 to 6 speakers

You can enjoy the Dolby Surround effects only when playing Dolby Surround audio or multi-channel audio (Dolby Digital) discs.
If your amplifier (receiver) has L and R audio input jacks only, use C-1. If your amplifier (receiver) has a digital input jack, use C-2.

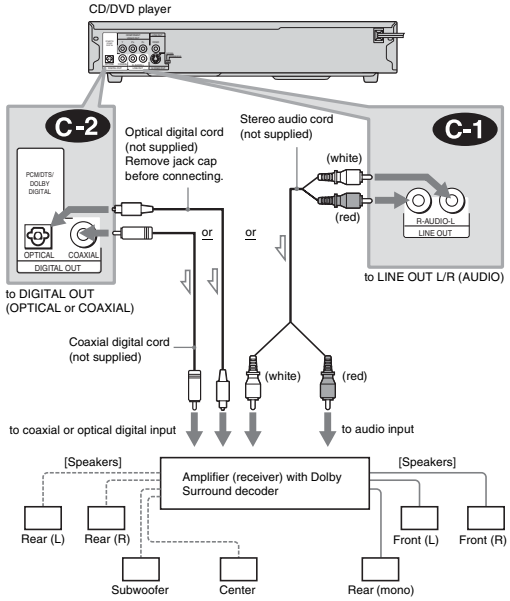

Note

When connecting 6 speakers, replace the monaural rear speaker with a center speaker, 2 rear speakers and a subwoofer.

→ continued

D Connecting to an AV amplifier (receiver) with a digital input jack having a Dolby Digital, or DTS decoder and 6 speakers

This connection will allow you to use the Dolby Digital, or DTS decoder function of your AV amplifier (receiver).

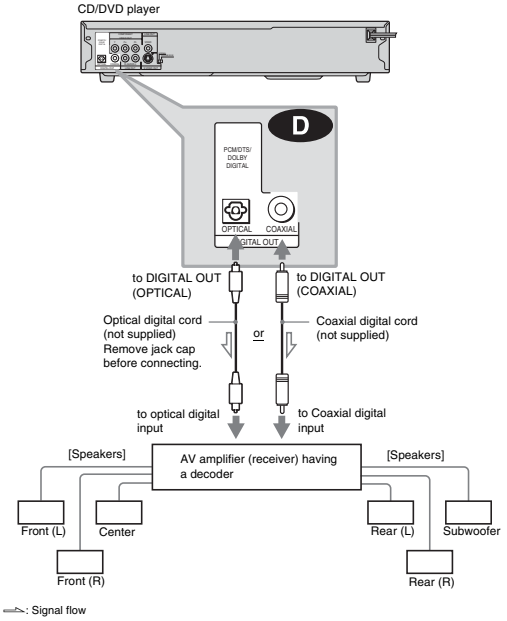

Hint

Use connection D when connecting to 7 or more speakers (6.1ch or more).

Notes

- After you have completed the connection, be sure to set "DOLBY DIGITAL" to "DOLBY DIGITAL" and "DTS" to "ON" in Quick Setup (page 25).
- In order to listen to DTS sound tracks, you must use these connections. DTS sound tracks are not output through the LINE OUT L/R (AUDIO) jacks, even if you set "DTS" to "ON" in Quick Setup (page 25).
- When you connect an amplifier (receiver) that conforms to the 96 kHz sampling frequency, set "48 kHz/96 kHz PCM" in "AUDIO SETUP" to "96 kHz/24 bit" (page 69).

Step 5: Connecting the Power Cord

Plug the player and TV power cords into an AC outlet.

Step 6: Quick Setup

Follow the steps below to make the minimum number of basic adjustments for using the player.
To skip an adjustment, press ►►I. To return to the previous adjustment, press I◄◄.

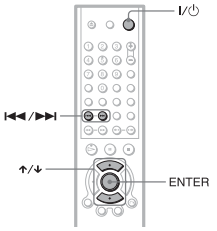

1 Turn on the TV.

2 Press I/⏻.

3 Switch the input selector on your TV so that the signal from the player appears on the TV screen.

"Press [ENTER] to run QUICK SETUP." appears at the bottom of the screen. If this message does not appear, select "QUICK" under "SETUP" in the Control Menu to run Quick Setup (page 65).

4 Press ENTER without inserting a disc.

The Setup Display for selecting the language used in the on-screen display appears.

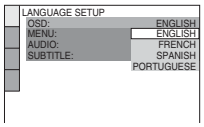

5 Press ↑/↓ to select a language.

The player uses the language selected here to display the menu and subtitles as well.

6 Press ENTER.

The Setup Display for selecting the aspect ratio of the TV to be connected appears.

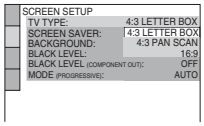

7 Press ↑/↓ to select the setting that matches your TV type.

◆ **If you have a 4:3 standard TV**
- 4:3 LETTER BOX or 4:3 PAN SCAN (page 66)

◆ **If you have a wide-screen TV or a 4:3 standard TV with a wide-screen mode**
- 16:9 (page 66)

→ continued

8 Press ENTER.

The Setup Display for selecting the type of jack used to connect your amplifier (receiver) appears.

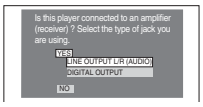

9 Press ↑/↓ to select the type of jack (if any) you are using to connect to an amplifier (receiver), then press ENTER.

Choose the item that matches the audio connection you selected on pages 21 to 24 (A through D).

A
- If you connect just a TV and nothing else, select "NO." Quick Setup is finished and connections are complete.

B-1 C-1
- Select "LINE OUTPUT L/R (AUDIO)." Quick Setup is finished and connections are complete.

B-2 C-2 D
- Select "DIGITAL OUTPUT." The Setup Display for "DOLBY DIGITAL" appears.

10 Press ↑/↓ to select the type of Dolby Digital signal you wish to send to your amplifier (receiver).

Choose the signal that matches the audio connection you selected on pages 22 to 24 (B through D).

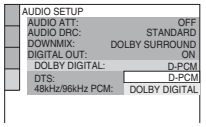

B-2 C-2
- D-PCM (page 69)

D
- DOLBY DIGITAL (only if the amplifier (receiver) has a Dolby Digital decoder) (page 69)

11 Press ENTER.

"DTS" is selected.

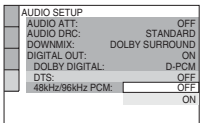

12 Press ↑/↓ to select whether or not you wish to send a DTS signal to your amplifier (receiver).

Choose the item that matches the audio connection you selected on pages 22 to 24 (B through D).

B-2 C-2
- OFF (page 69)

D
- ON (only if the amplifier (receiver) has a DTS decoder) (page 69)

13 Press ENTER.

Quick Setup is finished. All connections and setup operations are complete.

Enjoying the surround sound effects

To enjoy the surround sound effects of this player or your amplifier (receiver), set the following items as described below for the audio connection you selected on pages 22 to 24 (B through D). Each of these is the default setting and does not need to be adjusted when you first connect the player. Refer to page 64 for using the Setup Display.

Audio Connection (pages 21 to 24)

A
- No additional settings are needed.

B-1 C-1
- Set "DOWNMIX" to "DOLBY SURROUND" (page 69).
- If the sound distorts even when the volume is turned down, set "AUDIO ATT" to "ON" (page 68).

B-2 C-2 D
- Set "DOWNMIX" to "DOLBY SURROUND" (page 69).
- Set "DIGITAL OUT" to "ON" (page 69).

Playing Discs DVD-V

DVD-RW VCD CD DATA CD

Depending on the DVD or VIDEO CD, some operations may be different or restricted. Refer to the operating instructions supplied with your disc.

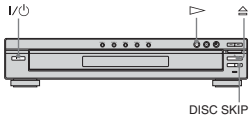

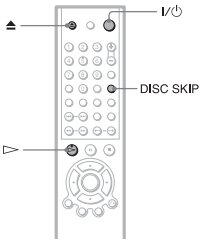

1 Turn on your TV.

2 Press I/⏻.

The player turns on.

3 Switch the input selector on your TV so that the signal from the player appears on the TV screen.

◆ **When using an amplifier (receiver)**
Turn on the amplifier (receiver) and select the appropriate channel so that you can hear sound from the player.

4 Press ≜ on the player, and place a disc on the disc tray.

To place other discs on the tray, press DISC SKIP and place the discs in the order you want to play them.
Each time you press DISC SKIP, the disc tray turns so you can place the discs on the empty compartments. The player plays from the last disc placed on the tray.

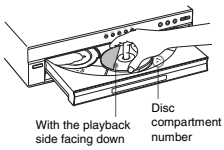

5 Press ▷.

The disc tray closes, and the player starts playback (continuous play). Adjust the volume on the TV or the amplifier (receiver).
Depending on the disc, a menu may appear on the TV screen. For DVD VIDEOs, see page 32. For VIDEO CDs, see page 33.

To turn off the player

Press I/⏻. The player enters standby mode.

Hint
You can have the player turn off automatically whenever you leave it in stop mode for more than 30 minutes. To turn on this function, set "AUTO POWER OFF" in "CUSTOM SETUP" to "ON" (page 67).

Additional operations

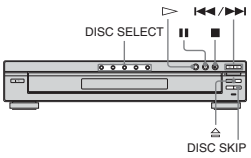

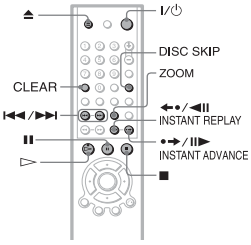

To	Operation
Select a disc	Press DISC SELECT DISC 1–DISC 5 on the player
Stop	Press ■
Pause	Press ❚❚
Resume play after pause	Press ❚❚ or ▷
Go to the next disc	Press DISC SKIP
Go to the next chapter, track, or scene in continuous play mode	Press ⏭
Go back to the previous chapter, track, or scene in continuous play mode	Press ⏮
Stop play and remove the disc	Press ≜
Replay the previous scene*	Press ←•/◀II INSTANT REPLAY during playback
Briefly fast forward the current scene**	Press •→/II▶ INSTANT ADVANCE during playback
Magnify the image***	Press ZOOM repeatedly Press CLEAR to cancel

* For DVD VIDEOs and DVD-RWs/DVD-Rs only.
** For DVD VIDEOs and DVD-RWs/DVD-Rs or DVD+RWs only.
***For Video and JPEG pictures only (except BACKGROUND pictures).
You can move the enlarged picture using ←/↑/↓/→. Depending upon the contents of the disc, the Zoom function may be canceled automatically when the picture is moved.

Hints
- The Instant Replay function is useful when you want to review a scene or dialog that you missed.
- The Instant Advance function is useful when you want to pass over a scene that you don't want to watch.
- Before loading the discs, a disc number indicator of an empty compartment may be lit.

Note
You may not be able to use the Instant Replay or Instant Advance function with some scenes.

→ continued

Replacing discs while playing a disc (EXCHANGE)

You can open the disc tray while playing a disc so that you can check which discs are to be played next and replace discs without interrupting playback of the current disc.

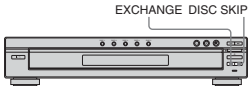

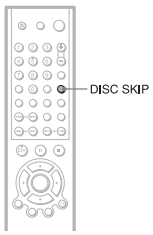

1 Press EXCHANGE.
The disc tray opens and two disc compartments appear. Even if the player is playing a disc, it doesn't stop playing.

2 Replace the discs in the compartments with new ones.

3 Press DISC SKIP.
The disc tray turns and another two disc compartments appear.

4 Replace the discs in the compartments with new ones.

5 Press EXCHANGE.
The disc tray closes.

Hint
While the disc tray is open,
– If the playback of the current disc end, the player stops playing. If the disc is played in One Disc Repeat Play mode (page 37), the current disc starts playing again.
– In Shuffle Play mode (page 36), titles/tracks/chapters are reshuffled only on the current disc.
– In Program Play mode (page 34), the titles/tracks/chapters only on the current disc are played.

Note
Do not push the disc tray to close in Step 5, as you may damage the player.

Locking the disc tray (Child Lock)

You can lock the disc tray to prevent children from opening it.

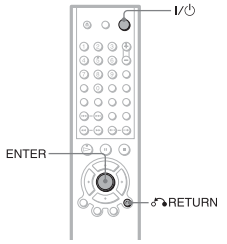

When the player is in standby mode, press RETURN, ENTER, and then I/⏻ on the remote.
The player turns on and "LOCKED" appears on the front panel display.
The ≜ and EXCHANGE buttons on the player and the ≜ button on the remote do not work while the Child Lock is set.

To unlock the disc tray

When the player is in standby mode, press RETURN, ENTER, and then I/⏻ again.

Note
Even if you select "RESET" under "SETUP" in the Control Menu (page 65), the disc tray remains locked.

Resuming Playback from the Point Where You Stopped the Disc (Multi-disc Resume) DVD-V VCD

The player stores the point where you stopped the disc for up to 6 discs and resumes playback the next time you insert the same disc. When you store a resume playback point for the seventh disc, the resume playback point for the first disc is deleted.

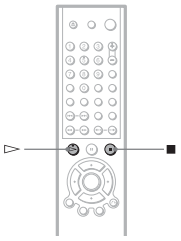

1 While playing a disc, press ■ to stop playback.

"RESUME" appears on the front panel display.

2 Press ▷.

The player starts playback from the point where you stopped the disc in step 1.

Hints
- To play from the beginning of the disc, press ■ twice, then press ▷.
- For DVD-RWs in VR mode, CDs and DATA CDs, the player remembers the resume playback point for the current disc unless the disc tray is opened, the power cord is disconnected, or only for DATA CDs, the player enters standby mode.

Notes
- "MULTI-DISC RESUME" in "CUSTOM SETUP" must be set to "ON" (default) for this function to work (page 68).
- The point where you stopped playing is cleared when:
– you change the play mode.
– you change the settings on the Setup Display.
- Resume Play does not work during Shuffle Play and Program Play.
- When playing a CD and DVD-RW (VR mode), the point where you stopped is cleared when:
– you press DISC SKIP or DISC SELECT.
– you opened the disc tray.
– you disconnect the power cord.
- This function may not work with some discs.
- If "MULTI-DISC RESUME" in "CUSTOM SETUP" is set to "ON" and you playback a recorded disc such as DVD-RW, the player may playback other recorded discs from the same resume point. To play from the beginning, press ■ twice and then press ▷.

Using the DVD's Menu DVD-V

A DVD is divided into long sections of a picture or a music feature called "titles." When you play a DVD which contains several titles, you can select the title you want using the TOP MENU button.
When you play DVDs that allow you to select items such as the language for the subtitles and the language for the sound, select these items using the MENU button.

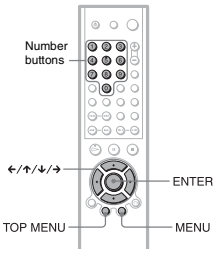

1 Press TOP MENU or MENU.

The disc's menu appears on the TV screen. The contents of the menu vary from disc to disc.

2 Press ←/↑/↓/→ or the number buttons to select the item you want to play or change.

If you press the number buttons, the following display appears.
Press the number buttons to select the item you want.

3 Press ENTER.

Selecting "ORIGINAL" or "PLAY LIST" on a DVD-RW Disc DVD-RW

Some DVD-RW discs in VR (Video Recording) mode have two types of titles for playback: originally recorded titles (ORIGINAL) and titles that can be created on recordable DVD players for editing (PLAY LIST). You can select the type of titles to be played.

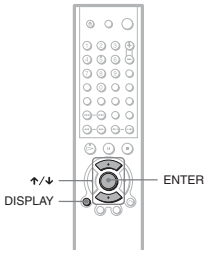

1 Press DISPLAY in stop mode.

The Control Menu appears.

2 Press ↑/↓ to select (ORIGINAL/PLAY LIST), then press ENTER.

The options for "ORIGINAL/PLAY LIST" appear.

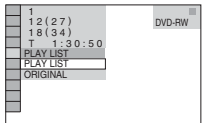

3 Press ↑/↓ to select the setting.
- PLAY LIST: plays the titles created from "ORIGINAL" for editing.
- ORIGINAL: plays the titles originally recorded.

4 Press ENTER.

Playing VIDEO CDs with PBC Functions (PBC Playback) VCD

PBC (Playback Control) allows you to play VIDEO CDs interactively by following the menu on the TV screen.

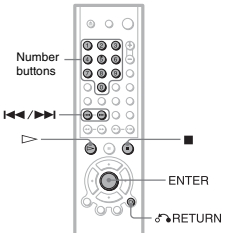

1 Start playing a VIDEO CD with PBC functions.

The menu for your selection appears.

2 Select the item number and track you want by pressing the number buttons.

3 Press ENTER.

4 Follow the instructions in the menu for interactive operations.

Refer to the instructions supplied with the disc, as the operating procedure may differ depending on the VIDEO CD.

To return to the menu
Press RETURN.

→ continued

Hint
To play without using PBC, press ⏮/⏭ or the number buttons while the player is stopped to select a track, then press ▷ or ENTER.
"Play without PBC." appears on the TV screen and the player starts continuous play. You cannot play still pictures such as a menu.
To return to PBC playback, press ■ twice then press ▷.

Note
Depending on the VIDEO CD, "Press ENTER" in step 3 may appear as "Press SELECT" in the instructions supplied with the disc. In this case, press ▷.

Various Play Mode Functions (Program Play, Shuffle Play, Repeat Play, A-B Repeat Play)

You can set the following play modes:
- Program Play (page 34)
- Shuffle Play (page 36)
- Repeat Play (page 37)
- A-B Repeat Play (page 38)

Note
The play mode is canceled when:
– you open the disc tray.
– the player enters standby mode by pressing I/⏻.

Creating your own program (Program Play) DVD-V VCD CD

You can play the contents of the current disc in the order you want by arranging the order of the titles, chapters, or tracks on the disc to create your own program. You can program up to 99 titles, chapters and tracks.

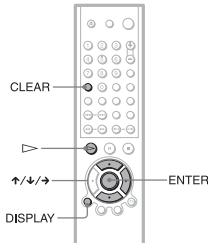

1 Press DISPLAY.
The Control Menu appears.

2 Press ↑/↓ to select (PROGRAM), then press ENTER.
The options for "PROGRAM" appear.

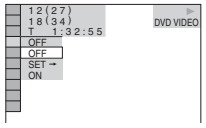

3 Press ↑/↓ to select "SET →" then press ENTER.

"TRACK" is displayed when you play a VIDEO CD or CD.

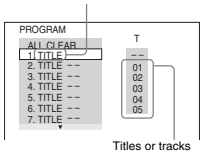

Titles or tracks recorded on a disc

4 Press →.

The cursor moves to the title or track row "T" (in this case, "01").

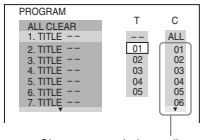

Chapters recorded on a disc

5 Select the title, chapter, or track you want to program.

◆ When playing a DVD VIDEO

For example, select chapter "03" of title "02."

Press ↑/↓ to select "02" under "T," then press ENTER.

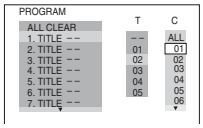

Next, press ↑/↓ to select "03" under "C," then press ENTER.

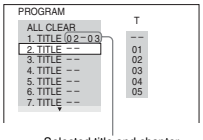

Selected title and chapter

◆ When playing a VIDEO CD or CD

For example, select track "02."

Press ↑/↓ to select "02" under "T," then press ENTER.

Selected track

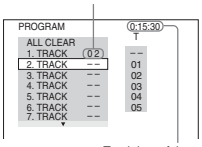

Total time of the programmed tracks

6 To program other titles, chapters, or tracks, repeat steps 4 to 5.

The programmed titles, chapters, and tracks are displayed in the selected order.

7 Press ▷ to start Program Play.

Program Play begins.

When the program ends, you can restart the same program again by pressing ▷.

To return to normal play

Press CLEAR, or select "OFF" in Step 3. To play the same program again, select "ON" in Step 3 and press ENTER.

To change or cancel a program

1 Follow Steps 1 through 3 of "Creating your own program (Program Play)."

2 Select the program number of the title, chapter, or track you want to change or cancel using ↑/↓, and press →.

3 Follow Step 5 for new programming. To cancel a program, select "--" under "T," then press ENTER.

→ continued

To cancel all the discs, titles, chapters, or tracks in the program

1 Follow steps 1 through 3 of "Creating your own program (Program Play)."

2 Press ↑ and select "ALL CLEAR."

3 Press ENTER.

Hint

You can do Repeat Play or Shuffle Play of the programmed titles, chapters, or tracks. During Program Play, follow the steps of "Repeat Play" (page 37) or "Shuffle Play" (page 36).

Note

You cannot use this function with VIDEO CDs and Super VCD with PBC playback.

Playing in random order (Shuffle Play) DVD-V VCD CD

You can have the player "shuffle" titles, chapters, or tracks of the current disc. Subsequent "shuffling" may produce a different playing order.

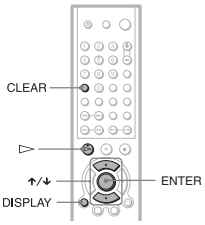

1 Press DISPLAY during playback.

The Control Menu appears.

2 Press ↑/↓ to select (SHUFFLE), then press ENTER.

The options for "SHUFFLE" appear.

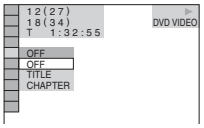

3 Press ↑/↓ to select the item to be shuffled.

◆ When playing a DVD VIDEO
- TITLE
- CHAPTER

◆ When playing a VIDEO CD or CD
- TRACK

◆ When Program Play is activated
- ON: shuffles titles, chapters, or tracks selected in Program Play.

4 Press ENTER.

Shuffle Play starts.

To return to normal play

Press CLEAR, or select "OFF" in step 3.

Hints
- You can set Shuffle Play while the player is stopped. After selecting the "SHUFFLE" option, press ▷. Shuffle Play starts.
- Up to 200 chapters in a disc can be played in random order when "CHAPTER" is selected.

Note

You cannot use this function with VIDEO CDs and Super VCD with PBC playback.

Playing repeatedly (Repeat Play)

DVD-V DVD-RW VCD CD DATA CD

You can play all of the titles, albums or tracks on a disc or a single title, chapter, album, or track repeatedly.

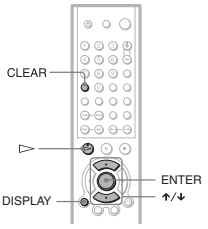

1 Press DISPLAY during playback.

The Control Menu appears.

2 Press ↑/↓ to select (REPEAT), then press ENTER.

The options for "REPEAT" appear.

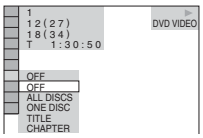

◆ When playing a DVD VIDEO
- ALL DISCS: repeats all of the discs.
- ONE DISC: repeats all of the titles on the current disc.
- TITLE: repeats the current title on a disc.
- CHAPTER: repeats the current chapter.

◆ When playing a DVD-RW
- ALL DISCS: repeats all of the discs.
- ONE DISC: repeats all of the titles of the selected type.
- TITLE: repeats the current title on a disc.
- CHAPTER: repeats the current chapter.

◆ When playing a VIDEO CD or CD
- ALL DISCS: repeats all of the discs.
- ONE DISC: repeats all of the tracks on the current disc.
- TRACK: repeats the current track.

◆ When playing a DATA CD (JPEG image)
- ALL DISCS: repeats all of the discs.
- ONE DISC: repeats all of the albums on the current disc.
- ALBUM: repeats the current album.

◆ When playing a DATA CD (MP3 audio)
- ALL DISCS: repeats all of the discs.
- ONE DISC: repeats all of the albums on the current disc.
- ALBUM: repeats the current album.
- TRACK: repeats the current track.

◆ When playing a DATA CD (MP3 audio and JPEG image)
- ALL DISCS: repeats all of the discs.
- ONE DISC: repeats all of the albums on the current disc.
- ALBUM: repeats the current album.
- TRACK: repeats the current track. (MP3 audio).

◆ When Program Play or Shuffle Play is activated
- ON: repeats Program Play or Shuffle Play.

To return to normal play

Press CLEAR, or select "OFF" in step 2.

→ continued

Hint

You can set Repeat Play while the player is stopped. After selecting the "REPEAT" option, press ▷. Repeat Play starts.

Notes
- You cannot use this function with VIDEO CDs and Super VCD with PBC playback.
- When playing a DATA CD which contains MP3 audio track and JPEG image files, and their playing time are not the same, the audio sound will not match image.

Repeating a specific portion (A-B Repeat Play) DVD-V DVD-RW VCD CD

You can play a specific portion of a title, chapter or track repeatedly. (This function is useful when you want to memorize lyrics, etc.)

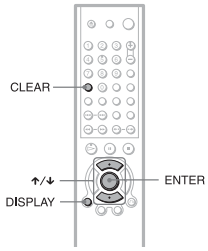

1 Press DISPLAY during playback.

The Control Menu appears.

2 Press ↑/↓ to select (A-B REPEAT), then press ENTER.

The options for "A-B REPEAT" appear.

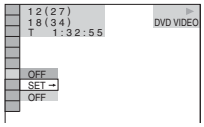

3 Press ↑/↓ to select "SET →," then press ENTER.

The "A-B REPEAT" setting bar appears.

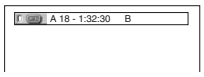

4 During playback, when you find the starting point (point A) of the portion to be played repeatedly, press ENTER.

The starting point (point A) is set.

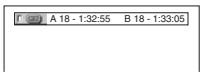

5 When you reach the ending point (point B), press ENTER again.

The set points are displayed and the player starts repeating this specific portion.

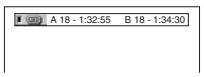

To return to normal play

Press CLEAR or select "OFF" in step 3.

Notes
- When you set A-B Repeat Play, the settings for Shuffle Play, Repeat Play, and Program Play are canceled.
- A-B Repeat Play does not work for titles containing still pictures on a DVD-RW in VR mode.
- A-B Repeat Play does not work across multiple titles.

Searching for a Scene

Searching for a Particular Point on a Disc (Search, Scan, Slow-motion Play, Freeze Frame)

You can quickly locate a particular point on a disc by monitoring the picture or playing back slowly.

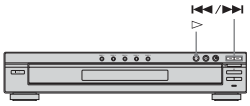

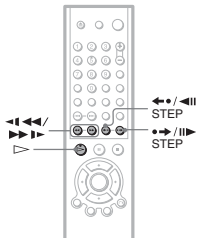

Notes

- Depending on the DVD/VIDEO CD, you may not be able to do some of the operations described.
- For DATA CDs, you can search for a particular point only on an MP3 audio track.

Locating a point quickly using the PREV (previous) / Next (next) button (Search)

DVD-V DVD-RW VCD CD DATA CD

You can search for a particular point on a disc using ⏮ / ⏭ on the player.
During playback, press and hold ⏭ on the player to locate a point in the playback direction, or press and hold ⏮ to locate a point in the opposite direction. When you find the point you want, release the button to return to normal playback speed.

Locating a point quickly by playing a disc in fast forward or fast reverse (Scan)

DVD-V DVD-RW VCD CD DATA CD

Press ◄❚ ◄◄ or ►► ❚► while playing a disc. When you find the point you want, press ▷ to return to normal speed. Each time you press ◄❚ ◄◄ or ►► ❚► during scan, the playback speed changes. With each press the indication changes as shown below. Actual speeds may differ with some discs.

Playback direction

×2► → 1►► → 2►► → 3►►
3►► (DVD VIDEO/DVD-RW/ VIDEO CD only)
×2► (DVD VIDEO/CD only)

Opposite direction

×2◄ → 1◄◄ → 2◄◄ → 3◄◄
3◄◄ (DVD VIDEO/DVD-RW/ VIDEO CD only)
×2◄ (DVD VIDEO only)

The "×2►"/"×2◄" playback speed is about twice the normal speed. The "3►►"/"3◄◄" playback speed is faster than the "2►►"/ "2◄◄" and the "2►►"/"2◄◄" playback speed is faster than 1►►"/1◄◄."

Searching for a Scene

→ continued

Watching frame by frame (Slow-motion play) DVD-V DVD-RW VCD

Press ◄❚ ◄◄ or ►► ❚► when the player is in pause mode. To return to the normal playback speed, press ▷.
Each time you press ◄❚ ◄◄ or ►► ❚► during Slow-motion play, the playback speed changes. Two speeds are available. With each press the indication changes as follows:

Playback direction
2 ❚► ←→ 1 ❚►

Opposite direction (DVD only)
2 ◄❚ ←→ 1 ◄❚

The "2 ❚►"/"2 ◄❚" playback speed is slower than "1 ❚►"/"1 ◄❚."

Playing one frame at a time (Freeze Frame) DVD-V DVD-RW VCD

When the player is in the pause mode, press •→/II► to go to the next frame. Press ←•/◄II to go to the preceding frame (DVD only). To return to normal playback, press ▷.

Note

You cannot search for a still picture on a DVD-RW in VR mode.

Searching for a Title/ Chapter/Track/Scene, etc. DVD-V DVD-RW VCD CD DATA CD

You can search a DVD by title or chapter, and you can search a VIDEO CD/CD/DATA CD by track, index, or scene. As titles and tracks are assigned unique numbers on the disc, you can select the desired one by entering its number. Or, you can search for a scene using the time code.

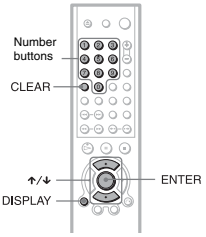

1 Press DISPLAY. (When playing a DATA CD with JPEG image files, press DISPLAY twice.)

The Control Menu appears.

2 Press ↑/↓ to select the search method.

◆ **When playing a DVD VIDEO/DVD-RW**

DISC
TITLE
CHAPTER
TIME/TEXT

Select "TIME/TEXT" to search for a starting point by inputting the time code.

◆ **When playing a VIDEO CD or Super VCD without PBC Playback**

DISC
TRACK
INDEX

◆ **When playing a VIDEO CD or Super VCD with PBC Playback**

DISC
SCENE
INDEX

◆ **When playing a CD**

DISC
TRACK

◆ **When playing a DATA CD (MP3 audio)**

DISC
ALBUM
TRACK

◆ **When playing a DATA CD (JPEG file)**

ALBUM
FILE

Example: when you select CHAPTER
"** (**)" is selected (** refers to a number). The number in parentheses indicates the total number of titles, chapters, tracks, indexes, scenes, albums or files.

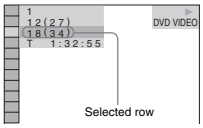

3 Press ENTER.

"** (**)" changes to "_ _ (**)."

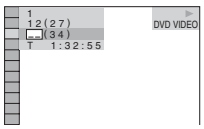

4 Press ↑/↓ or the number buttons to select the title, chapter, track, index, scene, etc., number you want to search for.

If you make a mistake
Cancel the number by pressing CLEAR, then select another number.

5 Press ENTER.

The player starts playback from the selected number.

To search for a scene using the time code (DVD VIDEO/DVD-RW only)

1 In Step 2, select TIME/TEXT. "T **:**:**" (playing time of the current title) is selected.
2 Press ENTER.
"T **:**:**" changes to "T --:--:--."
3 Input the time code using the number buttons, then press ENTER.
For example, to find the scene at 2 hours, 10 minutes, and 20 seconds after the beginning, just enter "2:10:20."

Hints

- When the Control Menu display is turned off, you can search for a chapter (DVD VIDEO/DVD-RW) or track (CD) by pressing the number buttons and ENTER.
- You can display the first scene of titles, chapters or tracks recorded on the disc on a screen divided into 9 sections. You can start playback directly by selecting one of the scenes. For details, see "Searching by Scene (PICTURE NAVIGATION)" (page 42).

Notes

- You cannot search for a scene on a DVD+RW using the time code.
- The title, chapter or track number displayed is the same number recorded on the disc.

Searching for a Scene

Searching by Scene (PICTURE NAVIGATION) DVD-V VCD

You can divide the screen into 9 subscreens and find the desired scene quickly.

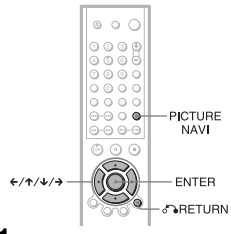

1 Press PICTURE NAVI during playback.

The following display appears.

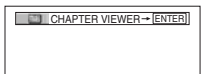

2 Press PICTURE NAVI repeatedly to select the item.

- CHAPTER VIEWER (for DVD VIDEO only)
- TITLE VIEWER (for DVD VIDEO only)
- TRACK VIEWER (for VIDEO CD only)

3 Press ENTER.

The following display appears.

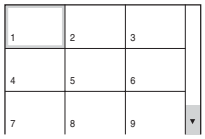

4 Press ←/↑/↓/→ to select a title, chapter, or track, and press ENTER.

Playback starts.

To return to normal play
Press RETURN.

Hint
If there are more than 9 titles, chapters, or tracks, ▼ is displayed at the bottom right.
To display the additional titles, chapters, or tracks, select the bottom scene and press ↓. To return to the previous scene, select the top scene and press ↑.

Note

Depending on the disc, you may not be able to select some items.

Viewing Information About the Disc

Checking the Playing Time and Remaining Time DVD-V DVD-RW VCD CD DATA CD

You can check the playing time and remaining time of the current title, chapter, or track. Also, you can check the DVD/CD text or track name (MP3 audio) recorded on the disc.

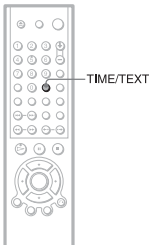

1 Press TIME/TEXT during playback.

The following display appears.

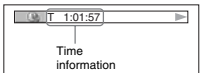

2 Press TIME/TEXT repeatedly to change the time information.

The available time information depends upon the type of disc you are playing.

◆ When playing a DVD VIDEO or DVD-RW

- T ∗:∗:∗ (hours : minutes : seconds)
  Playing time of the current title
- T– ∗:∗:∗
  Remaining time of the current title
- C ∗:∗:∗
  Playing time of the current chapter
- C– ∗:∗:∗
  Remaining time of the current chapter

◆ When playing a VIDEO CD or Super VCD (with PBC functions)

- ∗:∗ (minutes : seconds)
  Playing time of the current scene

◆ When playing a VIDEO CD (without PBC functions) or CD

- T ∗:∗ (minutes : seconds)
  Playing time of the current track
- T–∗:∗
  Remaining time of the current track
- D ∗:∗
  Playing time of the current disc
- D–∗:∗
  Remaining time of the current disc

◆ When playing a Super VCD (without PBC functions)

- T ∗:∗ (minutes : seconds)
  Playing time of the current track

◆ When playing a DATA CD (MP3 audio)

- T ∗:∗ (minutes : seconds)
  Playing time of the current track

→ continued

Checking the play information of the Disc

To check DVD/CD text

Press TIME/TEXT repeatedly in step 2 to display text recorded on the DVD/CD.
The DVD/CD text appears only when text is recorded in the disc. You cannot change the text. If the disc does not contain text, "NO TEXT" appears.

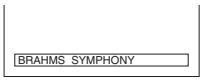

To check DATA CD (MP3 audio) text

By pressing TIME/TEXT while playing MP3 audio tracks on a DATA CD, the track name and album name appear. You can also display the audio bit rate (the amount data per second of the current audio) on your TV screen.

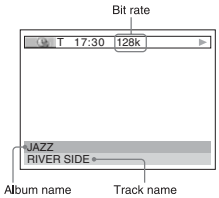

Checking the information on the front panel display

You can view the time information and text displayed on the TV screen also on the front panel display. The information on the front panel display changes as follows when you change the time information on your TV screen.

When playing a DVD VIDEO or DVD-RW

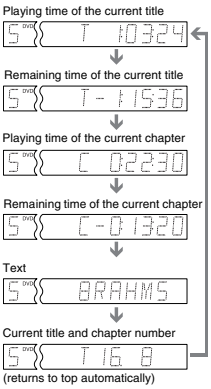

When playing a DATA CD (MP3 audio)

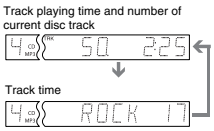

When playing a VIDEO CD (without PBC functions) or CD

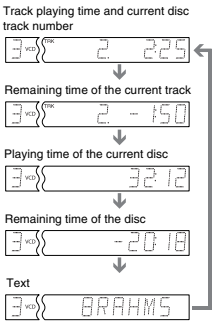

Hints

- When playing VIDEO CDs with PBC functions, the disc number, scene number and the playing time are displayed.
- When playing VIDEO CDs without PBC functions, the track number and the index number are displayed after the text.
- Long text that does not fit in a single line will scroll across the front panel display.
- You can also check the time information and text using the Control Menu (page 14).

Notes

- Depending on the type of disc being played, the DVD/CD text or track name may not be displayed.
- The player can only display the first level of the DVD/CD text, such as the disc name or title.
- Playing time of MP3 audio tracks may not be displayed correctly.
- If you play a disc containing JPEG image files only, the "NO AUDIO DATA" message appears on the front panel display.

Sound Adjustments

Changing the Sound DVD-V DVD-RW VCD CD DATA CD

When playing a DVD VIDEO recorded in multiple audio formats (PCM, Dolby Digital or DTS), you can change the audio format. If the DVD VIDEO is recorded with multilingual tracks, you can also change the language.
With CDs, DATA CDs, or VIDEO CDs, you can select the sound from the right or left channel and listen to the sound of the selected channel through both the right and left speakers. For example, when playing a disc containing a song with the vocals on the right channel and the instruments on the left channel, you can hear the instruments from both speakers by selecting the left channel.

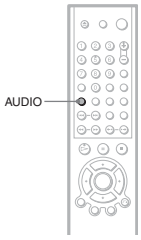

1 Press AUDIO during playback.

The following display appears.

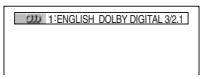

2 Press AUDIO repeatedly to select the desired audio signal.

◆ When playing a DVD VIDEO

Depending on the DVD VIDEO, the choice of language varies.
When 4 digits are displayed, they indicate a language code. Refer to "Language Code List" on page 76 to see which language the code represents.
When the same language is displayed two or more times, the DVD VIDEO is recorded in multiple audio formats.

◆ When playing a DVD-RW

The types of sound tracks recorded on a disc are displayed. The default setting is underlined.
Example:

- 1: MAIN (main sound)
- 1: SUB (sub sound)
- 1: MAIN+SUB (main and sub sound)

◆ When playing a VIDEO CD, CD, or DATA CD (MP3 audio)

The default setting is underlined.

- STEREO: The standard stereo sound
- 1/L: The sound of the left channel (monaural)
- 2/R: The sound of the right channel (monaural)

◆ When playing a Super VCD

The default setting is underlined.

- 1:STEREO: The stereo sound of the audio track 1
- 1:1/L: The sound of the left channel of the audio track 1 (monaural)
- 1:2/R: The sound of the right channel of the audio track 1 (monaural)
- 2:STEREO: The stereo sound of the audio track 2
- 2:1/L: The sound of the left channel of the audio track 2 (monaural)
- 2:2/R: The sound of the right channel of the audio track 2 (monaural)

Note

While playing a Super VCD on which the audio track 2 is not recorded, no sound will come out when you select "2:STEREO","2:1/L" or "2:2/R".

Checking the audio signal format DVD-V

If you press AUDIO repeatedly during playback, the format of the current audio signal (Dolby Digital, DTS, PCM, etc.) appears as shown below.

Example:
Dolby Digital 5.1 ch

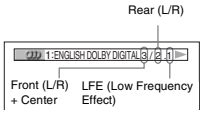

Example:

Dolby Digital 3 ch

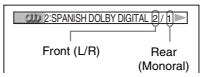

About audio signals
Audio signals recorded in a disc contain the sound elements (channels) shown below. Each channel is output from a separate speaker.
- Front (L)
- Front (R)
- Center
- Rear (L)
- Rear (R)
- Rear (Monaural): This signal can be either the Dolby Surround Sound processed signals or the Dolby Digital sound's monaural rear audio signals.
- LFE (Low Frequency Effect) signal

Note
If "DTS" is set to "OFF" in "AUDIO SETUP" (page 68) the DTS track selection option will not appear on the screen even if the disc contains DTS tracks.

TV Virtual Surround Settings (TVS) DVD-V

When you connect a stereo TV or 2 front speakers, TVS (TV Virtual Surround) lets you enjoy surround sound effects by using sound imaging to create virtual rear speakers from the sound of the front speakers (L: left, R: right) without using actual rear speakers.
TVS was developed by Sony to produce surround sound for home use using just a stereo TV.
If the player is set up to output the signal from the DIGITAL OUT (COAXIAL or OPTICAL) jack, the surround effect will only heard when "DOLBY DIGITAL" is set to "D-PCM" in "AUDIO SETUP" (page 69).

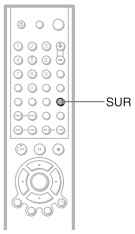

1 Press SUR during playback.
The following display appears.

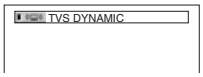

2 Press SUR repeatedly to select one of the TVS sounds.
Refer to the following explanations given for each item.
- TVS DYNAMIC
- TVS WIDE
- TVS NIGHT
- TVS STANDARD

→ continued

To cancel the setting
Select "OFF" in step 2.

◆TVS DYNAMIC
Creates virtual rear speakers from the sound of the front speakers (L, R) without using actual rear speakers (shown below).
This mode is effective when the distance between the front L and R speakers is short, such as with built-in speakers on a stereo TV.

◆TVS WIDE
Creates virtual rear speakers from the sound of the front speakers (L, R) without using actual rear speakers. The virtual speakers are reproduced as shown in the illustration below.
This mode is effective when the distance between the front L and R speakers is short, such as with built-in speakers on a stereo TV.

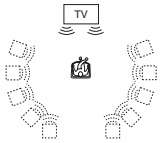

◆TVS NIGHT
Large sounds, such as explosions, are suppressed, but the quieter sounds are unaffected. This feature is useful when you want to hear the dialog and enjoy the surround sound effects of "TVS WIDE" at low volume.

◆TVS STANDARD
Creates virtual rear speakers from the sound of the front speakers (L, R) without using actual rear speakers. The virtual speakers are reproduced as shown in the illustration below. Use this setting when you want to use TVS with 2 separate speakers.

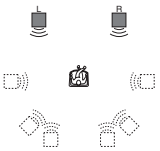

L : Front speaker (left)
R : Front speaker (right)
□ : Virtual speaker

Notes
- When the playing signal does not contain a signal for the rear speakers, the surround effects cannot be heard.
- When you select one of the TVS modes, turn off the surround setting of the connected TV or amplifier (receiver).
- Make sure that your listening position is between and at an equal distance from your speakers, and that the speakers are located in similar surroundings.
- Not all discs will respond to the "TVS NIGHT" function in the same way.

Enjoying Movies

Changing the Angles

DVD-V

If various angles (multi-angles) for a scene are recorded on the DVD VIDEO, "" appears in the front panel display. This means that you can change the viewing angle.

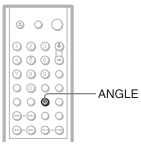

1 Press ANGLE during playback.
The number of the angle appears on the display.

2 Press ANGLE repeatedly to select the angle number.
The scene changes to the selected angle.

Note
Depending on the DVD VIDEO, you may not be able to change the angles even if multi-angles are recorded on the DVD VIDEO.

Displaying the Subtitles

DVD-V DVD-RW

If subtitles are recorded on the discs, you can change the subtitles or turn them on and off whenever you want while playing a DVD.

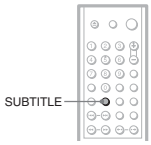

1 Press SUBTITLE during playback.
The following display appears.

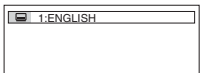

2 Press SUBTITLE repeatedly to select the language.

◆ When playing a DVD VIDEO
Select the language.
Depending on the DVD VIDEO, the choice of language varies.
When 4 digits are displayed, they indicate a language code. Refer to "Language Code List" on page 76 to see which language the code represents.

◆ When playing a DVD-RW
Select "ON."

To turn off the subtitles
Select "OFF" in step 2.

Note
Depending on the DVD VIDEO, you may not be able to change the subtitles even if multilingual subtitles are recorded on it. You also may not be able to turn them off.

Adjusting the Playback Picture (CUSTOM PICTURE MODE)

DVD-V DVD-RW VCD DATA CD

You can adjust the video signal of the DVD, VIDEO CD or DATA CD in JPEG format from the player to obtain the picture quality you want. Choose the setting that best suits the program you are watching.

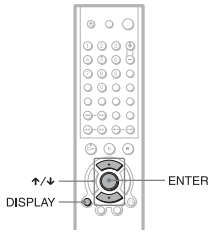

1 Press DISPLAY twice during playback.
The Control Menu appears.

2 Press ↑/↓ to select (CUSTOM PICTURE MODE), then press ENTER.
The options for "CUSTOM PICTURE MODE" appears.

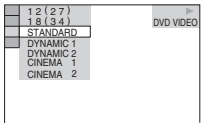

3 Press ↑/↓ to select the setting you want, then press ENTER.
The default setting is underlined.
- STANDARD: displays a standard picture.
- DYNAMIC 1: produces a bold dynamic picture by increasing the picture contrast and the color intensity.
- DYNAMIC 2: produces a more dynamic picture than DYNAMIC 1 by further increasing the picture contrast and the color intensity.
- CINEMA 1: enhances details in dark areas by increasing the black level.
- CINEMA 2: White colors become brighter and black colors become richer, and the color contrast is increased.

Hint
When you watch a movie, "CINEMA 1" or "CINEMA 2" is recommended.

Sharpening the Outline of an Image (SHARPNESS)

DVD-V DVD-RW VCD DATA CD

The Sharpness function sharpens the outlines of images on your TV screen.

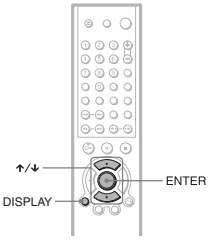

1 Press DISPLAY during playback.
The Control Menu appears.

2 Press ↑/↓ to select (SHARPNESS), then press ENTER.
The options for "SHARPNESS" appear.

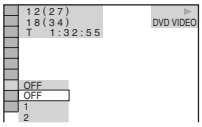

3 Press ↑/↓ to select a level.
- 1: enhances the outline.
- 2: enhances the outline more than 1.

4 Press ENTER.
The selected setting takes effect.

To cancel the "SHARPNESS" setting
Select "OFF" in Step 3.

About MP3 Audio Tracks and JPEG Image Files

What is MP3/JPEG?

MP3 is audio compression technology that satisfies the ISO/MPEG regulations. JPEG is image compression technology.

Discs that the player can play

You can play back DATA CDs (CD-ROMs/CD-Rs/CD-RWs) recorded in MP3 (MPEG1 Audio Layer 3) and JPEG format. However, the discs must be recorded according to ISO9660 level 1, level 2 or Joliet format for the player to recognize the tracks (or files). You can also play discs recorded in Multi Session.
See the instructions supplied with the CD-R/CD-RW drives and the recording software (not supplied) for details on the recording format.

Note on the multi-session disc
If MP3 audio tracks or JPEG image files are recorded in the first session, the player will also play MP3 audio tracks or JPEG image files in other sessions. If audio tracks and images in Music CD format or Video CD format are recorded in the first session, only the first session will be played back.

Note
The player may not be able to play some DATA CDs created in the Packet Write format. In this case, you cannot view the JPEG images recorded.

MP3 audio track or JPEG image file that the player can play

The player can play the MP3 audio tracks or JPEG image files:
- which have the extension ".MP3" (MP3 audio track) or ".JPG" (JPEG image file)
- which conform to the DCF* image file format

* "Design rule for Camera File system": Image standards for digital cameras regulated by Japan Electronic Industries Development Association (JEIDA)

Notes
- The player will play any data with the extension ".MP3," ".JPG," or ".JPEG" even if they are not in MP3 or JPEG format. Playing this data may generate a loud noise which could damage your speaker system.
- The player does not conform to audio in MP3PRO format.

Playback order of MP3 audio tracks or JPEG image files

The playback order of albums MP3 audio tracks, or JPEG image files recorded on a DATA is as follows:

◆**Structure of disc contents**

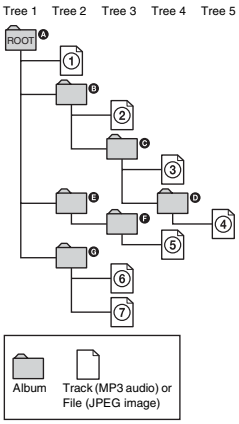

When you insert a DATA CD and press ▷, the numbered tracks (or files) are played sequentially, from ① through ⑦. Any sub-albums/tracks (or files) contained within a currently selected album take priority over

the next album in the same tree. (Example: Ⓒ contains Ⓓ so ④ is played before ⑤.)

When you press MENU and the list of album names appears (page 54), the album names are arranged in the following order: Ⓐ → Ⓑ → Ⓒ → Ⓓ → Ⓕ → Ⓖ. Albums that do not contain tracks (or files) (such as album Ⓔ) do not appear in the list.

Hints
- If you add numbers (01, 02, 03, etc.) to the front of the track/file names when you store the tracks (or files) in a disc, the tracks and files will be played in that order.
- Since a disc with many trees takes longer to start playback, it is recommended that you create albums with no more than two trees.

Notes
- Depending on the software you use to create the DATA CD, the playback order may differ from the above illustration.
- The playback order above may not be applicable if there are more than 200 albums and 300 files in each album.
- The player can recognize up to 200 albums (the player will count just albums, including albums that do not contain MP3 audio tracks and JPEG image files). The player will not play any albums beyond the 200th album.
- The player may take longer time to playback, when progressing to the following album or jump to other album.
- Some type of JPEG files cannot be played.

Playing DATA CDs with MP3 Audio Track and JPEG Image Files DATA CD

MP3 audio tracks and JPEG image files recorded on DATA CDs (CD-ROMs/CD-Rs/CD-RWs) can be played on this player.

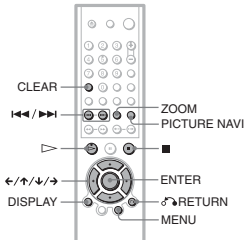

Hints
- You can view the disc information while playing MP3 audio tracks and JPEG image files (page 44).
- You can select Repeat Play (page 37) and "AUDIO" (page 46) while playing an MP3 audio track.

Note
KODAK Picture CD starts playback automatically when the disc is inserted.

➡continued

Selecting an album from a DATA CD

1 Insert a DATA CD into the disc tray.
The list of albums recorded on the DATA CD appears.
When an album is being played, its title is shaded.
You can turn the album list on and off by pressing the MENU button.

2 Press ↑/↓ to select the album you want and press ▷.
The player starts playing the selected album.

To stop playback
Press ■.

To play the next or previous MP3 audio track
Press ⏭ or ⏮. Note that you can select the next album by continuing to press ⏭ after the last track on the first album, but that you cannot return to the previous album by pressing ⏮. To return to the previous album, select the album from the album list.

To play the next or previous JPEG image file
Press ← or →. Note that you can select the next album by continuing to press → after the last image on the first album, but that you cannot return to the previous album by pressing ←. To return to the previous album, select the album from the album list.

To turn off the display
Press MENU.

Selecting an MP3 audio track from a DATA CD

1 Insert a DATA CD into the disc tray.
The albums recorded on the DATA CD appear. When an album is being played, its title is shaded.

2 Select an album using ↑/↓ and press ENTER.
The list of tracks contained in the album appears.

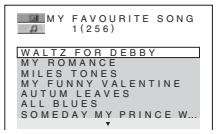

3 Select a track using ↑/↓ and press ENTER.
The selected track starts playing. You can turn the track list off by pressing the MENU button. Pressing the MENU button again will display the album list.

To stop playback
Press ■.

To play the next or previous MP3 audio track
Press ⏭ or ⏮. Note that you can select the next album by continuing to press ⏭ after the last track on the first album, but that you cannot return to the previous album by pressing ⏮. To return to the previous album, select the album from the album list.

To return to the previous display
Press ↩ RETURN.

To turn off the display
Press MENU.

Selecting a JPEG image file from a DATA CD

1 Insert a DATA CD into the disc tray.
The albums recorded on the DATA CD appear. When an album is being played, its title is shaded.

2 Select an album using ↑/↓ and press PICTURE NAVI.
Images of files in the album appear in 16 subscreens.

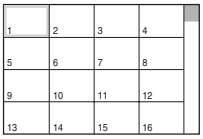

3 Select the image you want to view by pressing ←/↑/↓/→ and press ENTER.

To go to the next or previous JPEG image file
Press ← or →. Note that you can select the next album by continuing to press → after the last image on the first album, but you cannot return to the previous album by pressing ←. To return to the previous album, select the album from the album list.

To view the images as a slideshow
Press ▷. The slideshow starts from the selected image.

To stop playback
Press ■.

Hints
- A scroll box is displayed at the right side of the screen. To display the additional image files, select the bottom image and press ↓. To return to the previous image, select the top image and press ↑.
- You can also change the slideshow duration (page 57), effect (page 58) and sharpness (page 51) while playing JPEG image file.

Playing Audio Tracks and Images as a Slideshow with Sound

You can play a slideshow with sound by first placing both JPEG and MP3 files in the same album on a DATA CD. Then, when you play back the DATA CD, select AUTO mode as explained below.

1 Insert a DATA CD into the disc tray.
The albums recorded on the DATA CD appear.

2 Press DISPLAY.
The Control Menu appears.

3 Press ↑/↓ to select MODE (MP3, JPEG), then press ENTER.
The options for "MODE (MP3, JPEG)" appear.

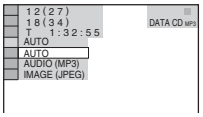

4 Press ↑/↓ to select the setting you want and press ENTER.
The default setting is underlined.

◆ **AUTO:**
Play back JPEG image files as a slideshow with sound (MP3 audio track).

◆ **AUDIO (MP3):**
Play back MP3 audio tracks continuously.

◆ **IMAGE (JPEG):**
Play back JPEG image files as a slideshow.

5 Press MENU.
The list of albums recorded on the DATA CD appears.

6 Press ↑/↓ to select the album you want and press ▷.
The player starts playing the selected album.

You can turn the album list on and off by pressing the MENU button repeatedly.

➡continued

Hints
- You can also change the slideshow duration (page 57), effect (page 58) and sharpness (page 51) while viewing JPEG image files.
- If you want to play a slideshow to the same audio track, set the track to Repeat Play (page 37).
- When you select AUTO, the player can recognize up to 300 MP3 tracks and 300 JPEG files in a single album. When you select AUDIO (MP3) or IMAGE (JPEG), the player can recognize up to 600 MP3 and 600 JPEG files in a single album. A maximum of 200 albums can be recognized regardless of the selected mode.

Notes
- You cannot playback JPEG files and MP3 tracks at the same time if they are not contained in the same album.
- When the JPEG image file's playback duration is longer than the MP3 audio track, the image slideshow continues without sound.
- When the MP3 audio track is longer than the JPEG image file's playback duration, the audio track continues with no slideshow.
- If there are no MP3 audio tracks and JPEG image files in the DATA CD, the "No audio data" and "No image data" messages appear on the screen.
- The PICTURE NAVI button does not work when AUDIO (MP3) is selected.
- If you play large MP3 track data and JPEG image data at the same time, the sound may skip. It is recommended that you set the MP3 bit rate to 128 kbps or lower when creating the file. If the sound still skips, then reduce the size of the JPEG file.

Rotating a JPEG image

When a JPEG image file is displayed on the screen, you can rotate the image by 90 degrees.

Press ↑/↓ while viewing an image. Each time you press ↑, the image rotates counterclockwise by 90 degrees.
Example of when you press ↑ once:

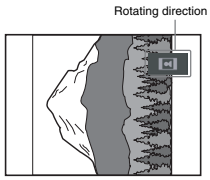

Press CLEAR to return to normal view.

Magnifying a JPEG image

When a JPEG image is displayed on the screen, you can enlarge the image by using the zoom function.

◆Press ZOOM once
Enlarge the image twice (x2) the actual size.

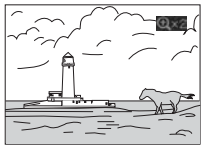

◆Press ZOOM twice
Enlarge the image twice (x4) the preceding size (x2).

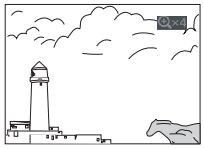

To return to the normal image size at any time
Press CLEAR.

Hint
You can move the enlarged picture using ←/↑/↓/→.

Notes
- Nothing happens when you press ← while playing the first image file of the album.
- If you press ← or → to go to the next or previous image, the "Rotating a JPEG image" function is canceled.
- The slideshow stops when you press ↑/↓ or ZOOM buttons.

Specifying the slideshow duration DATA CD

When you play JPEG image files using slideshow, you can specify the duration for slides to appear on the screen.

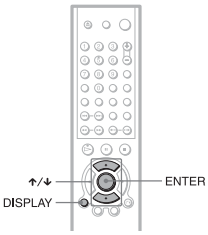

1 Press DISPLAY twice.
The Control Menu for JPEG appears.

2 Press ↑/↓ to select (INTERVAL), then press ENTER.
The options for "INTERVAL" appear.

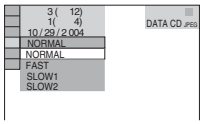

3 Press ↑/↓ to select the setting you want.
The default setting is underlined.

◆ **NORMAL:**
Sets the duration to about 6 to 9 seconds. (Images that are four million pixels or more will lengthen the duration.)

◆ **FAST:**
Sets the duration shorter than NORMAL.

◆ **SLOW1:**
Sets the duration longer than NORMAL.

◆ **SLOW2:**
Sets the duration longer than SLOW1.

4 Press ENTER.
The selected setting takes effect.

Note
Some JPEG files may take longer to display than others, which may make the duration seems longer that the option you selected. Especially progressive JPEG files.

Selecting an effect for image files in the slideshow DATA CD

When you play a JPEG image file, you can select the effect to be used when viewing the slide show.

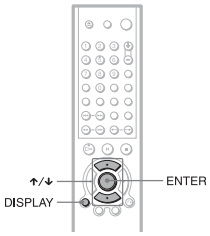

1 Press DISPLAY twice.
The Control Menu for JPEG appears.

2 Press ↑/↓ to select (EFFECT), then press ENTER.
The options for "EFFECT" appear.

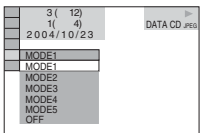

3 Press ↑/↓ to select the setting you want.
The default setting is underlined.

◆ **MODE1:**
The image sweeps in from top to bottom.

◆ **MODE2:**
The image stretches out from left to right of the screen.

◆ **MODE3:**
The image stretches out from the center of the screen.

◆ **MODE4:**
The images randomly cycle through the effects.

◆ **MODE5:**
The next image slides over the previous image.

◆ **OFF:**
Turns off this function. No slideshow begins as the slides do not change.

4 Press ENTER.
The selected setting takes effect.

Using Various Additional Functions

Locking Discs (CUSTOM PARENTAL CONTROL, PARENTAL CONTROL)

You can set two kinds of playback restrictions for the desired disc.
- Custom Parental Control
  You can set playback restrictions so that the player will not play inappropriate discs.
- Parental Control
  Playback of some DVD VIDEOs can be limited according to a predetermined level such as the age of the users. Scenes may be blocked or replaced with different scenes.

The same password is used for both Parental Control and Custom Parental Control.

Custom Parental Control

DVD-V VCD CD

You can set the same Custom Parental Control password for up to 40 discs. When you set the 41st-disc, the first disc is canceled.

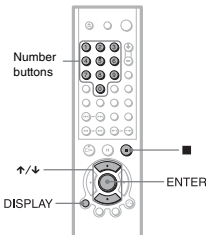

1 Insert the disc you want to lock.
If the disc is playing, press ■ to stop playback.

2 Press DISPLAY while the player is in stop mode.
The Control Menu appears.

3 Press ↑/↓ to select (PARENTAL CONTROL), then press ENTER.
The options for "PARENTAL CONTROL" appear.

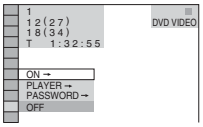

4 Press ↑/↓ to select "ON →," then press ENTER.

◆ If you have not entered a password
The display for registering a new password appears.

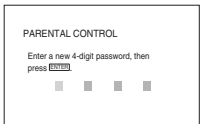

Enter a 4-digit password using the number buttons, then press ENTER.
The display for confirming the password appears.

◆ When you have already registered a password
The display for entering the password appears.

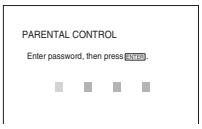

5 Enter or re-enter your 4-digit password using the number buttons, then press ENTER.
"Custom parental control is set." appears and the screen returns to the Control Menu.

➡continued

To turn off the Custom Parental Control function

1 Follow steps 1 through 3 of "Custom Parental Control."

2 Press ↑/↓ to select "OFF →," then press ENTER.

3 Enter your 4-digit password using the number buttons, then press ENTER.

To play a disc for which Custom Parental Control is set

1 Insert the disc for which Custom Parental Control is set.
The "CUSTOM PARENTAL CONTROL" display appears.

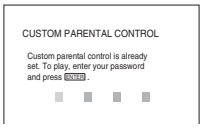

2 Enter your 4-digit password using the number buttons, then press ENTER.
The player is ready for playback.

Hint
If you forget your password, enter the 6-digit number "199703" using the number buttons when the "CUSTOM PARENTAL CONTROL" display asks you for your password, then press ENTER. The display will ask you to enter a new 4-digit password.

Parental Control (limited playback) DVD-V

Playback of some DVD VIDEOs can be limited according to a predetermined level such as the age of the users. The "PARENTAL CONTROL" function allows you to set a playback limitation level.

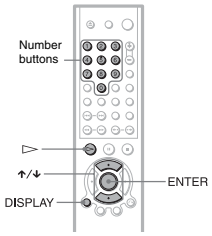

1 Press DISPLAY while the player is in stop mode.
The Control Menu appears.

2 Press ↑/↓ to select (PARENTAL CONTROL), then press ENTER.
The options for "PARENTAL CONTROL" appear.

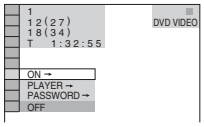

3 Press ↑/↓ to select "PLAYER →," then press ENTER.

◆ If you have not entered a password
The display for registering a new password appears.

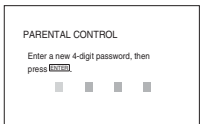

Enter a 4-digit password using the number buttons, then press ENTER.
The display for confirming the password appears.

◆ When you have already registered a password
The display for entering the password appears.

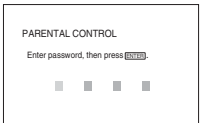

4 Enter or re-enter your 4-digit password using the number buttons, then press ENTER.
The display for setting the playback limitation level appears.

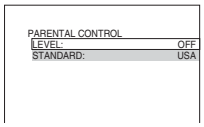

5 Press ↑/↓ to select "STANDARD," then press ENTER.
The selection items for "STANDARD" are displayed.

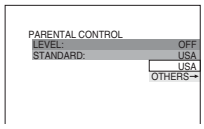

6 Press ↑/↓ to select a geographic area as the playback limitation level, then press ENTER.
The area is selected.
When you select "OTHERS →," select and enter a standard code in the table on page 62 using the number buttons.

7 Press ↑/↓ to select "LEVEL," then press ENTER.
The selection items for "LEVEL" are displayed.

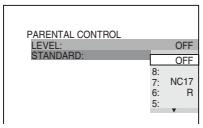

8 Select the level you want using ↑/↓, then press ENTER.
Parental Control setting is complete.

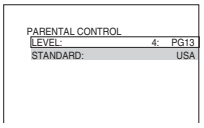

The lower the value, the stricter the limitation.

To turn off the Parental Control function

Set "LEVEL" to "OFF" in step 8.

To play a disc for which Parental Control is set

1 Insert the disc and press ▷.
The display for entering your password appears.

2 Enter your 4-digit password using the number buttons, then press ENTER.
The player starts playback.

➔ continued

Hint
If you forget your password, remove the disc and repeat steps 1 to 3 of "Parental Control (limited playback)." When you are asked to enter your password, enter "199703" using the number buttons, then press ENTER. The display will ask you to enter a new 4-digit password. After you enter a new 4-digit password, replace the disc in the player and press ▷. When the display for entering your password appears, enter your new password.

Notes
- The Control Menu display will show different items depending on the disc type.
- When you play discs which do not have the Parental Control function, playback cannot be limited on this player.
- Depending on the disc, you may be asked to change the parental control level while playing the disc. In this case, enter your password, then change the level. If the Resume Play mode is canceled, the level returns to the previous level.

Area Code

Standard	Code number	Standard	Code number
Argentina	2044	Malaysia	2363
Australia	2047	Mexico	2362
Austria	2046	Netherlands	2376
Belgium	2057	New Zealand	2390
Brazil	2070	Norway	2379
Canada	2079	Pakistan	2427
Chile	2090	Philippines	2424
China	2092	Portugal	2436
Denmark	2115	Russia	2489
Finland	2165	Singapore	2501
France	2174	Spain	2149
Germany	2109	Sweden	2499
India	2248	Switzerland	2086
Indonesia	2238	Thailand	2528
Italy	2254	United Kingdom	2184
Japan	2276		
Korea	2304		

Changing the password

1 Press DISPLAY while the player is in stop mode.
The Control Menu appears.

2 Press ↑/↓ to select (PARENTAL CONTROL), then press ENTER.
The options for "PARENTAL CONTROL" appear.

3 Press ↑/↓ to select "PASSWORD →," then press ENTER.
The display for entering the password appears.

4 Enter your 4-digit password using the number buttons, then press ENTER.

5 Enter a new 4-digit password using the number buttons, then press ENTER.

6 To confirm your password, re-enter it using the number buttons, then press ENTER.

If you make a mistake entering your password

Press ← before you press ENTER and input the correct number.

Controlling Your TV with the Supplied Remote

You can control the sound level, input source, and power switch of your Sony TV with the supplied remote.

Note

Depending on the unit being connected, you may not be able to control your TV using all or some of the buttons on the supplied remote.

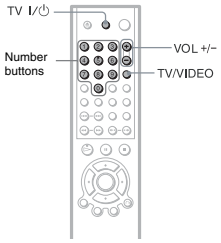

You can control the following items with the supplied remote.

By pressing	You can
TV I/⏻	Turn the TV on or off
VOL +/–	Adjust the volume of the TV
TV/VIDEO	Switch the TV's input source between the TV and other input sources

Controlling other TVs with the remote

You can control the sound level, input source, and power switch of non-Sony TVs as well. If your TV is listed in the table below, set the appropriate manufacturing code.

1 **While holding down TV I/⏻, press the number buttons to select your TV's manufacturer's code (see the table below).**

2 **Release TV I/⏻.**

Code numbers of controllable TVs

If more than one code number is listed, try entering them one at a time until you find the one that works with your TV.

Manufacturer	Code number
Sony	01 (default)
Daewoo	04, 22
Hitachi	02, 04
JVC	09
LG/Goldstar	04
MGA/Mitsubishi	04, 13
Panasonic	19
Philips	21
RCA	04, 10
Samsung	04, 20
Sharp	18
Toshiba	07, 18

Notes

- If you enter a new code number, the code number previously entered will be erased.
- When you replace the batteries of the remote, the code number you have set may be reset to the default setting. Set the appropriate code number again.
- Depending on the unit being connected, you may not be able to control your TV using all or some of the buttons on the supplied remote.

Using the Setup Display

By using the Setup Display, you can make various adjustments to items such as picture and sound. You can also set a language for the subtitles and the Setup Display, among other things. For details on each Setup Display item, see pages from 65 to 69.

Note

Playback settings stored in the disc take priority over the Setup Display settings and not all the functions described may work.

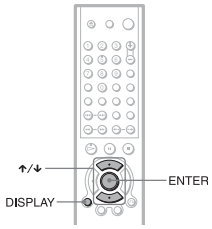

1 **Press DISPLAY when the player is in stop mode.**

The Control Menu appears.

2 **Press ↑/↓ to select (SETUP), then press ENTER.**

The options for "SETUP" appear.

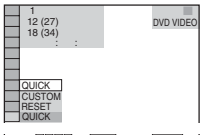

3 **Press ↑/↓ to select "CUSTOM," then press ENTER.**

The Setup Display appears.

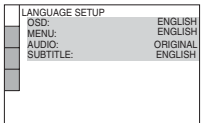

4 **Press ↑/↓ to select the setup item from the displayed list: "LANGUAGE SETUP," "SCREEN SETUP," "CUSTOM SETUP," or "AUDIO SETUP." Then press ENTER.**

The Setup item is selected.
Example: "SCREEN SETUP"

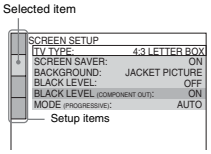

5 **Select an item using ↑/↓, then press ENTER.**

The options for the selected item appear.
Example: "TV TYPE"

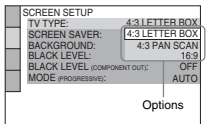

6 **Select a setting using ↑/↓, then press ENTER.**

The setting is selected and setup is complete.
Example: "16:9"

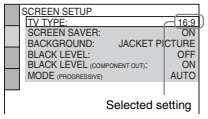

To enter the Quick Setup mode

Select "QUICK" in step 3. Follow from step 5 of the Quick Setup explanation to make basic adjustments (page 25).

To reset all of the "SETUP" settings

1 Select "RESET" in step 3 and press ENTER

2 Select "YES" using ↑/↓.
You can also quit the process and return to the Control Menu by selecting "NO" here.

3 Press ENTER.
All the settings explained on pages 65 to 69 return to the default settings. Do not press I/⏻ while resetting the player as it takes a few seconds to complete.

Setting the Display or Sound Track Language

(LANGUAGE SETUP)

"LANGUAGE SETUP" allows you to set various languages for the on-screen display or sound track.

Select "LANGUAGE SETUP" in the Setup Display. To use the display, see "Using the Setup Display" (page 64).

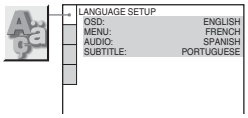

◆ OSD (On-Screen Display)
Switches the display language on the screen.

◆ MENU (DVD VIDEO only)
You can select the desired language for the disc's menu.

◆ AUDIO (DVD VIDEO only)
Switches the language of the sound track. When you select "ORIGINAL," the language given priority in the disc is selected.

◆ SUBTITLE (DVD VIDEO only)
Switches the language of the subtitle recorded on the DVD VIDEO.
When you select "AUDIO FOLLOW," the language for the subtitles changes according to the language you selected for the sound track.

Hint
If you select "OTHERS →" in "MENU," "SUBTITLE," and "AUDIO," select and enter a language code from "Language Code List" on page 76 using the number buttons.

Note

When you select a language in "MENU," "SUBTITLE," or "AUDIO" that is not recorded on the DVD VIDEO, one of the recorded languages will be automatically selected.

Settings for the Display

(SCREEN SETUP)

Choose settings according to the TV to be connected.

Select "SCREEN SETUP" in the Setup Display. To use the display, see "Using the Setup Display" on page 64.
The default settings are underlined.

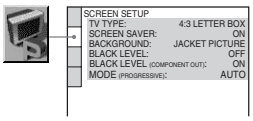

◆ TV TYPE
Selects the aspect ratio of the connected TV (4:3 standard or wide).

4:3 LETTER BOX	Select this when you connect a 4:3 screen TV. Displays a wide picture with bands on the upper and lower portions of the screen.
4:3 PAN SCAN	Select this when you connect a 4:3 screen TV. Automatically displays the wide picture on the entire screen and cuts off the portions that do not fit.
16:9	Select this when you connect a wide-screen TV or a TV with a wide mode function.

4:3 LETTER BOX

4:3 PAN SCAN

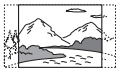

16:9

Note

Depending on the DVD, "4:3 LETTER BOX" may be selected automatically instead of "4:3 PAN SCAN" or vice versa.

◆ SCREEN SAVER
The screen saver image appears when you leave the player in pause or stop mode for 15 minutes, or when you play back a CD or DATA CD (MP3 audio) for more than 15 minutes. The screen saver will help prevent your display device from becoming damaged (ghosting).
Press ▷ to turn off the screen saver.

ON	Turns on the screen saver.
OFF	Turns off the screen saver.

◆ BACKGROUND
Selects the background color or picture on the TV screen in stop mode or while playing a CD or DATA CD (MP3 audio).

JACKET PICTURE	The jacket picture (still picture) appears, but only when the jacket picture is already recorded on the disc (CD-EXTRA, etc.). If the disc does not contain a jacket picture, the "GRAPHICS" picture appears.
GRAPHICS	A preset picture stored in the player appears.
BLUE	The background color is blue.
BLACK	The background color is black.

◆ BLACK LEVEL
Selects the black level (setup level) for the video signals output from the jacks other than COMPONENT VIDEO OUT.

ON	Sets the black level of the output signal to the standard level.
OFF	Lowers the standard black level. Use this when the picture becomes too white.

◆ BLACK LEVEL (COMPONENT OUT)
Selects the black level (setup level) for the video signals output from the COMPONENT VIDEO OUT jacks.
You cannot select this when the player outputs progressive signal and the PROGRESSIVE indicator lights up in blue on the front panel.

OFF	Sets the black level of the output signal to the standard level.
ON	Raise the standard black level. Use this when the picture becomes too black.

When NORMAL/PROGRESSIVE switch is set to PROGRESSIVE

You can fine-tune the Progressive (480p) video signal output when you set NORMAL/PROGRESSIVE switch to PROGRESSIVE (the PROGRESSIVE indicator lights up) and connect the player using the COMPONENT VIDEO OUT jacks to a TV that is able to accept the video signal in progressive format.

◆ MODE (PROGRESSIVE)
DVD software can be divided into two types: film based software and video based software. Video based software is derived from TV, such as dramas and sit-coms, and displays images at 30 frames/60 fields per second. Film based software is derived from film and displays images at 24 frames per second. Some DVD software contains both Video and Film.
In order for these images to appear natural on your screen when output in PROGRESSIVE mode (60 frames per second), the progressive video signal needs to be converted to match the type of DVD software that you are watching.

AUTO	This will automatically detect if you are playing Film based or Video based software and convert the signal to the appropriate conversion mode. Normally select this position.
VIDEO	This will set the conversion mode for Video based software, regardless of the type of software that you are playing.

Note

Using the LINE OUT (VIDEO) jack or the S VIDEO OUT jack will cause the picture to become unclear or go blank when you set NORMAL/PROGRESSIVE switch to PROGRESSIVE. In this case, set NORMAL/PROGRESSIVE switch to NORMAL so that the PROGRESSIVE indicator turns off.

Custom Settings (CUSTOM SETUP)

Use this to set up playback related and other settings.

Select "CUSTOM SETUP" in the Setup Display. To use the display, see "Using the Setup Display" (page 64).
The default settings are underlined.

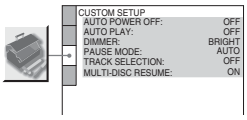

◆ AUTO POWER OFF
Switches the Auto Power Off setting on or off.

OFF	Switches this function off.
ON	The player enters standby mode when left in stop mode for more than 30 minutes.

◆ AUTO PLAY
Switches the Auto Play setting on or off. This function is useful when the player is connected to a timer (not supplied).

OFF	Switches this function off.
ON	Automatically starts playback when the player is turned on.

◆ DIMMER
Adjusts the lighting of the front panel display.

BRIGHT	Makes the lighting bright.
DARK	Makes the lighting dark.

◆ PAUSE MODE (DVD VIDEO/DVD-RW only)
Selects the picture in pause mode.

AUTO	The picture, including subjects that move dynamically, is output with no jitter. Normally select this position.

→ continued

FRAME	The picture, including subjects that do not move dynamically, is output in high resolution.

◆ TRACK SELECTION (DVD VIDEO only)
Gives the sound track which contains the highest number of channels priority when you play a DVD VIDEO on which multiple audio formats (PCM, DTS, or Dolby Digital format) are recorded.

OFF	No priority given.
AUTO	Priority given.

Notes

- When you set the item to "AUTO," the language may change. The "TRACK SELECTION" setting has higher priority than the "AUDIO" settings in "LANGUAGE SETUP" (page 65).
- If you set "DTS" to "OFF" (page 69), the DTS sound track is not played even if you set "TRACK SELECTION" to "AUTO."
- If PCM, DTS, and Dolby Digital sound tracks have the same number of channels, the player selects PCM, DTS, and Dolby Digital sound tracks in this order.

◆ MULTI-DISC RESUME (DVD VIDEO/VIDEO CD only)
Switches the Multi-disc Resume setting on or off. Resume playback point can be stored in memory for up to 6 different DVD VIDEO/VIDEO CD discs (page 31).

ON	Stores the resume settings in memory for up to six discs.
OFF	Does not store the resume settings in memory. Playback restarts at the resume point only for the current disc in the player.

Settings for the Sound (AUDIO SETUP)

"AUDIO SETUP" allows you to set the sound according to the playback and connection conditions.

Select "AUDIO SETUP" in the Setup Display. To use the display, see "Using the Setup Display" (page 64).
The default settings are underlined.

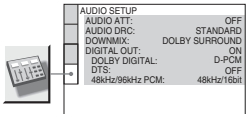

◆ AUDIO ATT (attenuation)
If the playback sound is distorted, set this item to "ON." The player reduces the audio output level.
This function affects the output of the LINE OUT L/R (AUDIO) jack.

OFF	Normally, select this position.
ON	Select this when the playback sound from the speakers is distorted.

◆ AUDIO DRC (Dynamic Range Control) (DVD VIDEO/DVD-RW only)
Makes the sound clear when the volume is turned down when playing a DVD that conforms to "AUDIO DRC." This affects the output from the following jacks:
– LINE OUT L/R (AUDIO) jack
– DIGITAL OUT (COAXIAL or OPTICAL) jack only when "DOLBY DIGITAL" is set to "D-PCM" (page 69).

STANDARD	Normally select this position.
TV MODE	Makes the low sounds clear even if you turn the volume down.
WIDE RANGE	Gives you the feeling of being at a live performance.

◆ DOWNMIX (DVD VIDEO/DVD-RW only)
Switches the method for mixing down to 2 channels when you play a DVD which has rear sound elements (channels) or is recorded in Dolby Digital format. For details on the rear signal components, see "Checking the audio signal format" (page 47). This function affects the output of the following jacks:
– LINE OUT L/R (AUDIO) jack
– DIGITAL OUT (COAXIAL or OPTICAL) jack when "DOLBY DIGITAL" is set to "D-PCM" (page 69).

DOLBY SUR-ROUND	Normally, select this position. Multi-channel audio signals are output to two channels for enjoying surround sounds.
NORMAL	Multi-channel audio signals are downmixed to two channels for use with your stereo.

◆ DIGITAL OUT
Selects if audio signals are output via the DIGITAL OUT (COAXIAL or OPTICAL) jack.

ON	Normally select this position. When you select "ON," see "Setting the digital output signal" for further settings.
OFF	The influence of the digital circuit upon the analog circuit is minimal.

Setting the digital output signal

Switches the method of outputting audio signals when you connect a component such as an amplifier (receiver) or MD deck with a digital input jack.
For connection details, see page 20.
Select "DOLBY DIGITAL", "DTS" and "48kHz/96kHz PCM" after setting "DIGITAL OUT" to "ON."

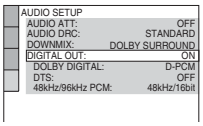

If you connect a component that does not conform to the selected audio signal, a loud noise (or no sound) will come out from the speakers, damaging your ears or speakers.

◆ DOLBY DIGITAL (DVD VIDEO/DVD-RW only)
Selects the type of Dolby Digital signal.

D-PCM	Select this when the player is connected to an audio component lacking a built-in Dolby Digital decoder. You can select whether the signals conform to Dolby Surround (Pro Logic) or not by making adjustments to the "DOWNMIX" item in "AUDIO SETUP" (page 69).
DOLBY DIGITAL	Select this when the player is connected to an audio component with a built-in Dolby Digital decoder.

◆ DTS (DVD VIDEO only)
Selects whether or not to output DTS signal.

OFF	Select this when the player is connected to an audio component lacking a built-in DTS decoder.
ON	Select this when the player is connected to an audio component with a built-in DTS decoder.

◆ 48kHz/96kHz PCM (DVD VIDEO only)
Selects the sampling frequency of the audio signal.

48kHz/16bit	The audio signals of DVD VIDEOs are always converted to 48kHz/16bit.
96kHz/24bit	All types of signals including 96kHz/24bit are output in their original format. However, if the signal is encrypted for copyright protection purposes, the signal is only output as 48kHz/16bit.

Note

The analog audio signals from the LINE OUT L/R (AUDIO) jacks are not affected by this setting and keep their original sampling frequency level.

Additional Information

Troubleshooting

If you experience any of the following difficulties while using the player, use this troubleshooting guide to help remedy the problem before requesting repairs.
Should any problem persist, consult your nearest Sony dealer (for customers in the U.S.A. only).

Power

The power is not turned on.
➡ Check that the AC power cord is connected securely.

Picture

There is no picture/picture noise appears.
➡ Re-connect the connecting cord securely.
➡ The connecting cord is damaged.
➡ Check the connection to your TV (page 18) and switch the input selector on your TV so that the signal from the player appears on the TV screen.
➡ The disc is dirty or flawed.
➡ If the picture output from your player goes through your VCR to get to your TV or if you are connected to a combination TV/VIDEO player, the copy-protection signal applied to some DVD programs could affect picture quality. If you still experience problems even when you connect your player directly to your TV, please try connecting your player to your TV's S VIDEO input (page 18).
➡ You set the NORMAL/PROGRESSIVE switch to PROGRESSIVE on the rear panel (the PROGRESSIVE indicator lights up) even though your TV cannot accept the progressive signal. In this case, set the NORMAL/PROGRESSIVE switch to NORMAL on the rear panel so that the PROGRESSIVE indicator turns off.
➡ You set the NORMAL/PROGRESSIVE switch to PROGRESSIVE on the rear panel (the PROGRESSIVE indicator lights up) but did not connect your TV to the player's COMPONENT VIDEO OUT jacks using a COMPONENT VIDEO cord. Set to the PROGRESSIVE only when you connect your TV to the player's COMPONENT VIDEO OUT jacks using a component video cord (page 19).
➡ Even if your TV is compatible with progressive format (480p) signals, the image may be affected when you set the player to progressive format. In this case, set the NORMAL/PROGRESSIVE switch to NORMAL so that the PROGRESSIVE indicator turns off and the player is set to normal (interlace) format.

Even though you set the aspect ratio in "TV TYPE" of "SCREEN SETUP," the picture does not fill the screen.
➡ The aspect ratio of the disc is fixed on your DVD.

Sound

There is no sound.
➡ Re-connect the connecting cord securely.
➡ The connecting cord is damaged.
➡ The player is connected to the wrong input jack on the amplifier (receiver) (page 22, 23, 24).
➡ The amplifier (receiver) input is not correctly set.
➡ The player is in pause mode or in Slow-motion Play mode.
➡ The player is in fast forward or fast reverse mode.
➡ If the audio signal does not come through the DIGITAL OUT (COAXIAL or OPTICAL) jack, check the audio settings (page 69).
➡ While playing a Super VCD on which the audio track 2 is not recorded, no sound will come out when you select "2:STEREO", "2:1/L" or "2:2/R".

Sound distortion occurs.
➡ Set "AUDIO ATT" in "AUDIO SETUP" to "ON" (page 68).

The sound volume is low.
➡ The sound volume is low on some DVDs. The sound volume may improve if you set "AUDIO DRC" to "TV MODE" (page 68).
➡ Set "AUDIO ATT" in "AUDIO SETUP" to "OFF" (page 68).

Operation

The remote does not function.
- ➡ There are obstacles between the remote and the player.
- ➡ The distance between the remote and the player is too far.
- ➡ The remote is not pointed at the remote sensor on the player.
- ➡ The batteries in the remote are weak.

The disc does not play.
- ➡ The disc is turned over.
  Insert the disc with the playback side facing down on the disc tray.
- ➡ The disc is skewed.
- ➡ The player cannot play certain discs (page 8).
- ➡ The region code on the DVD does not match the player.
- ➡ Moisture has condensed inside the player (page 5).
- ➡ The player cannot play a recorded disc that is not correctly finalized (page 9).

The MP3 audio track cannot be played (page 34).
- ➡ The DATA CD is not recorded in the MP3 format that conforms to ISO9660 Level 1/ Level 2 or Joliet.
- ➡ The MP3 audio track does not have the extension ".MP3."
- ➡ The data is not formatted in MP3 even though it has the extension ".MP3."
- ➡ The data is not MPEG1 Audio Layer 3 data.
- ➡ The player cannot play audio tracks in MP3PRO format.
- ➡ The MODE (MP3, JPEG) setting have been set to "IMAGE (JPEG)".

The JPEG image file cannot be played (page 53)
- ➡ The DATA CD is not recorded in a JPEG format that conforms to ISO9660 Level 1, or Joliet.
- ➡ It has an extension other than ".JPEG" or ".JPG".
- ➡ It is larger than 3072 (width) × 2048 (height) in normal mode, or more than 3,300,000 dots in Progressive JPEG.
- ➡ It does not fit the screen (those images are reduced).
- ➡ The MODE (MP3, JPEG) setting has been set to "AUDIO (MP3)".

The MP3 audio tracks and JPEG image file starts playing simultaneously (page 53).
- ➡ AUTO has been selected in MODE (MP3, JPEG).

The titles of album/track/file name are not displayed correctly.
- ➡ The player can only display numbers and letters of the alphabets. Other characters are displayed as "*".

The disc does not start playing from the beginning.
- ➡ Program Play, Shuffle Play, Repeat Play, or A-B Repeat Play has been selected (page 34).
- ➡ Resume play has taken effect (page 31).

The player starts playing the disc automatically.
- ➡ The disc features an auto playback function.
- ➡ "AUTO PLAY" in "CUSTOM SETUP" is set to "ON" (page 67).

Playback stops automatically.
- ➡ While playing discs with an auto pause signal, the player stops playback at the auto pause signal.

You cannot perform some functions such as Stop, Search, Slow-motion Play, Repeat Play, Shuffle Play, or Program Play.
- ➡ Depending on the disc, you may not be able to do some of the operations above. See the operating manual that comes with the disc.

The language for the sound track cannot be changed.
- ➡ Try using the DVD's menu instead of the direct selection button on the remote (page 32).
- ➡ Multilingual tracks are not recorded on the DVD being played.
- ➡ The DVD prohibits the changing of the language for the sound track.

→ continued

The subtitle language cannot be changed or turned off.
- ➡ Try using the DVD's menu instead of the direct selection button on the remote (page 32).
- ➡ Multilingual subtitles are not recorded on the DVD being played.
- ➡ The DVD prohibits the changing of the subtitles.

The angles cannot be changed.
- ➡ Try using the DVD's menu instead of the direct selection button on the remote (page 32).
- ➡ Multi-angles are not recorded on the DVD being played.
- ➡ The angle can only be changed when the "ANGLE" indicator lights up on the front panel display (page 11).
- ➡ The DVD prohibits changing of the angles.

The player does not operate properly.
- ➡ When static electricity, etc., causes the player to operate abnormally, unplug the player.

5 numbers or letters are displayed on the screen and on the front panel display.
- ➡ The self-diagnosis function was activated. (See the table on page 72.)

The disc tray does not open and "LOCKED" appears on the front panel display.
- ➡ Child Lock is set (page 30).

The disc tray does not open and "TRAY LOCKED" appears on the front panel display.
- ➡ Contact your Sony dealer or local authorized Sony service facility.

"Data error" appears on the TV screen when playing a DATA CD.
- ➡ The MP3 audio track/JPEG image file you want to play is broken.
- ➡ The data is not MPEG1 Audio Layer 3 data.
- ➡ The JPEG image file format does not conform to DCF (page 52).
- ➡ The JPEG image file has the extension ".JPG" or ".JPEG" but not in JPEG format.

Self-diagnosis Function

(When letters/numbers appear in the display)

When the self-diagnosis function is activated to prevent the player from malfunctioning, a five-character service number (e.g., C 13 50) with a combination of a letter and four digits appears on the screen and the front panel display. In this case, check the following table.

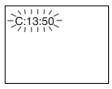

First three characters of the service number	Cause and/or corrective action
C 13	The disc is dirty. ➡ Clean the disc with a soft cloth (page 9).
C 31	The disc is not inserted correctly. ➡ Re-insert the disc correctly.
E XX (xx is a number)	To prevent a malfunction, the player has performed the self-diagnosis function. ➡ Contact your nearest Sony dealer or local authorized Sony service facility and give the 5-character service number. Example: E 61 10

Glossary

Album (page 52, 54)
A unit in which to store JPEG image files or MP3 audio tracks on a DATA CD. ("Album" is an exclusive definition for this player.)

Chapter (page 44)
Sections of a picture or a music feature that are smaller than titles. A title is composed of several chapters. Depending on the disc, no chapters may be recorded.

Dolby Digital (page 24, 69)
Digital audio compression technology developed by Dolby Laboratories. This technology conforms to multi-channel surround sound. The rear channel is stereo and there is a discrete subwoofer channel in this format. Dolby Digital provides the same discrete channels of high quality digital audio found in "Dolby Digital" theater surround sound systems. Good channel separation is realized because all of the channel data are recorded discretely and little deterioration is realized because all channel data processing is digital.

Dolby Surround (Pro Logic) (page 23)
Audio signal processing technology that Dolby Laboratories developed for surround sound. When the input signal contains a surround component, the Pro Logic process outputs the front, center and rear signals. The rear channel is monaural.

DTS (page 24, 69)
Digital audio compression technology that Digital Theater Systems, Inc. developed. This technology conforms to multi-channel surround sound. The rear channel is stereo and there is a discrete subwoofer channel in this format. DTS provides the same discrete channels of high quality digital audio.
Good channel separation is realized because all of the channel data is recorded discretely and little deterioration is realized because all channel data processing is digital.

DVD VIDEO (page 8)
A disc that contains up to 8 hours of moving pictures even though its diameter is the same as a CD.
The data capacity of a single-layer and single-sided DVD is 4.7 GB (Giga Byte), which is 7 times that of a CD. The data capacity of a double-layer and single-sided DVD is 8.5 GB, a single-layer and double-sided DVD is 9.4 GB, and double-layer and double-sided DVD is 17 GB.
The picture data uses the MPEG 2 format, one of the worldwide standards of digital compression technology. The picture data is compressed to about 1/40 (average) of its original size. The DVD also uses a variable rate coding technology that changes the data to be allocated according to the status of the picture. Audio information is recorded in a multi-channel format, such as Dolby Digital, allowing you to enjoy a more real audio presence.
Furthermore, various advanced functions such as the multi-angle, multilingual, and Parental Control functions are provided with the DVD.

DVD-RW (page 8)
A DVD-RW is a recordable and rewritable disc that is the same size as a DVD VIDEO. The DVD-RW has two different modes: VR mode and Video mode. DVD-RWs created in Video mode have the same format as a DVD VIDEO, while discs created in VR (Video Recording) mode allow the contents to be programmed or edited.

DVD+RW (page 8)
A DVD+RW (plus RW) is a recordable and rewritable disc. DVD+RWs use a recording format that is comparable to the DVD VIDEO format.

File (page 52, 54)
A JPEG image recorded on a DATA CD ("File" is an exclusive definition for this player.) A single file consist of a single image.

→ continued

Film based software, Video based software (page 67)
DVDs can be classified as Film based or Video based software. Film based DVDs contain the same images (24 frames per second) that are shown at movie theaters. Video based DVDs, such as television dramas or sit-coms, display images at 30 frames/60 fields (25 frames/50 fields) per second.

Index (CD)/Video Index (VIDEO CD) (page 14)
A number that divides a track into sections to easily locate the point you want on a CD or VIDEO CD. Depending on the disc, no index may be recorded.

Normal (Interlace) format (page 67)
Interlace format shows every other line of an image as a single "field" and is the standard method for displaying images on television. The even number field shows the even numbered lines of an image, and the odd numbered field shows the odd numbered lines of an image.

Progressive format (page 67)
Compared to the Normal (Interlace) format that alternately shows every other line of an image (field) to create one frame, the Progressive format shows the entire image at once as a single frame. This means that while the Interlace format can show 30 frames (60 fields) in one second, the Progressive format can show 60 frames in one second. The overall picture quality increases and still images, text, and horizontal lines appear sharper. This player is compatible with the 480 progressive format.

Progressive JPEGs (page 57)
Progressive JPEGs are used mostly on the internet. They are different from other JPEG in that they "fade in" gradually instead of being drawn from top to bottom when displayed on a browser. This lets you view the image while it is being downloaded.

Scene (page 44)
On a VIDEO CD with PBC (playback control) functions, the menu screens, moving pictures and still pictures are divided into sections called "scenes."

Title (page 11)
The longest section of a picture or music feature on a DVD, movie, etc., in video software, or the entire album in audio software.

Track (page 11)
Sections of a picture or a music feature on a VIDEO CD, CD or DATA CD (the length of a song). ("Track" in DATA CD is an exclusive definition for this player.)

Specifications

System
Laser: Semiconductor laser
Signal format system: NTSC

Audio characteristics
Frequency response: DVD VIDEO (PCM 96 kHz): 2 Hz to 44 kHz (±1.0 dB)/DVD VIDEO (PCM 48 kHz): 2 Hz to 22 kHz (±0.5 dB)/CD: 2 Hz to 20 kHz (±0.5 dB)
Signal-to-noise ratio (S/N ratio): 115 dB (LINE OUT L/R (AUDIO) jack only)
Harmonic distortion: 0.003 %
Dynamic range: DVD VIDEO: 103 dB/CD: 99 dB
Wow and flutter: Less than detected value (±0.001% W PEAK)

The signals from LINE OUT L/R (AUDIO) jack are measured. When you play PCM sound tracks with a 96 kHz sampling frequency, the output signals from the DIGITAL OUT (COAXIAL or OPTICAL) jack are converted to 48 kHz sampling frequency.

Outputs
(**Jack name:** Jack type/Output level/Load impedance)
LINE OUT L/R (AUDIO) : Phono jack/ 2 Vrms/10 kilohms
DIGITAL OUT (OPTICAL) : Optical output jack/–18 dBm (wave length: 660 nm)
DIGITAL OUT (COAXIAL) : Phono jack/ 0.5 Vp-p/75 ohms
COMPONENT VIDEO OUT (Y, P_B, P_R) : Phono jack/Y: 1.0 Vp-p/P_B, P_R: 0.65 Vp-p/75 ohms
LINE OUT (VIDEO) : Phono jack/ 1.0 Vp-p/75 ohms
S VIDEO OUT : 4-pin mini DIN/ Y: 1.0 Vp-p/C: 0.286 Vp-p /75 ohms

General
Power requirements: 120 V AC, 60 Hz
Power consumption: 13 W
Dimensions (approx.): 430 × 83 × 411.7 mm (17 × 3 1/64 × 16 1/32 in.) (width/height/depth) incl. projecting parts
Mass (approx.): 4.5 kg (10 lb)
Operating temperature: 5 °C to 35 °C (41 °F to 95 °F)
Operating humidity: 25 % to 80 %

Supplied accessories
See page 17.

Specifications and design are subject to change without notice.

ENERGY STAR® is a U.S. registered mark. As an ENERGY STAR® Partner, Sony Corporation has determined that this product meets the ENERGY STAR® guidelines for energy efficiency.

Language Code List

For details, see pages 46, 49, 65.
The language spellings conform to the ISO 639: 1988 (E/F) standard.

Code	Language	Code	Language	Code	Language	Code	Language
1027	Afar	1183	Irish	1347	Maori	1507	Samoan
1028	Abkhazian	1186	Scots Gaelic	1349	Macedonian	1508	Shona
1032	Afrikaans	1194	Galician	1350	Malayalam	1509	Somali
1039	Amharic	1196	Guarani	1352	Mongolian	1511	Albanian
1044	Arabic	1203	Gujarati	1353	Moldavian	1512	Serbian
1045	Assamese	1209	Hausa	1356	Marathi	1513	Siswati
1051	Aymara	1217	Hindi	1357	Malay	1514	Sesotho
1052	Azerbaijani	1226	Croatian	1358	Maltese	1515	Sundanese
1053	Bashkir	1229	Hungarian	1363	Burmese	1516	Swedish
1057	Byelorussian	1233	Armenian	1365	Nauru	1517	Swahili
1059	Bulgarian	1235	Interlingua	1369	Nepali	1521	Tamil
1060	Bihari	1239	Interlingue	1376	Dutch	1525	Telugu
1061	Bislama	1245	Inupiak	1379	Norwegian	1527	Tajik
1066	Bengali; Bangla	1248	Indonesian	1393	Occitan	1528	Thai
		1253	Icelandic	1403	(Afan)Oromo	1529	Tigrinya
1067	Tibetan	1254	Italian	1408	Oriya	1531	Turkmen
1070	Breton	1257	Hebrew	1417	Punjabi	1532	Tagalog
1079	Catalan	1261	Japanese	1428	Polish	1534	Setswana
1093	Corsican	1269	Yiddish	1435	Pashto; Pushto	1535	Tonga
1097	Czech	1283	Javanese			1538	Turkish
1103	Welsh	1287	Georgian	1436	Portuguese	1539	Tsonga
1105	Danish	1297	Kazakh	1463	Quechua	1540	Tatar
1109	German	1298	Greenlandic	1481	Rhaeto-Romance	1543	Twi
1130	Bhutani	1299	Cambodian			1557	Ukrainian
1142	Greek	1300	Kannada	1482	Kirundi	1564	Urdu
1144	English	1301	Korean	1483	Romanian	1572	Uzbek
1145	Esperanto	1305	Kashmiri	1489	Russian	1581	Vietnamese
1149	Spanish	1307	Kurdish	1491	Kinyarwanda	1587	Volapük
1150	Estonian	1311	Kirghiz	1495	Sanskrit	1613	Wolof
1151	Basque	1313	Latin	1498	Sindhi	1632	Xhosa
1157	Persian	1326	Lingala	1501	Sangho	1665	Yoruba
1165	Finnish	1327	Laothian	1502	Serbo-Croatian	1684	Chinese
1166	Fiji	1332	Lithuanian			1697	Zulu
1171	Faroese	1334	Latvian; Lettish	1503	Singhalese		
1174	French			1505	Slovak		
1181	Frisian	1345	Malagasy	1506	Slovenian	1703	Not specified

SECTION 2
DISASSEMBLY

2-1. DISASSEMBLY

• This set can be disassembled in the order shown below.

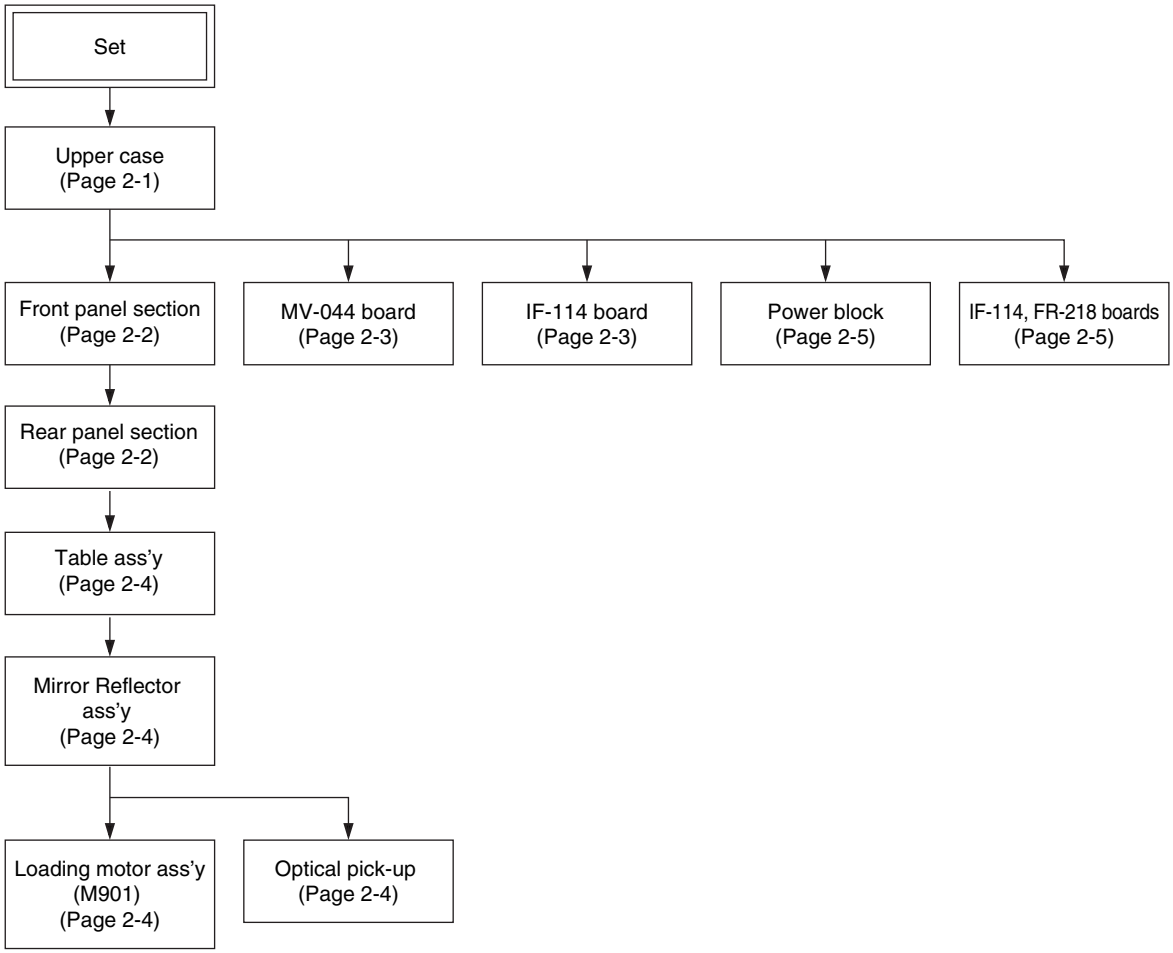

NOTE: Follow the disassembly procedure in the numerical order given.

2-2. UPPER CASE

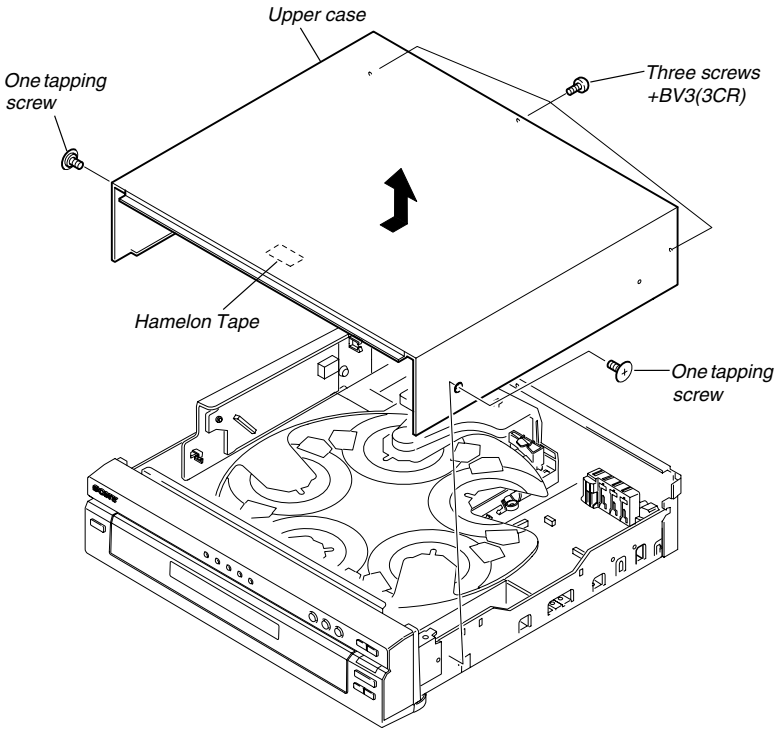

2-3. FRONT PANEL SECTION

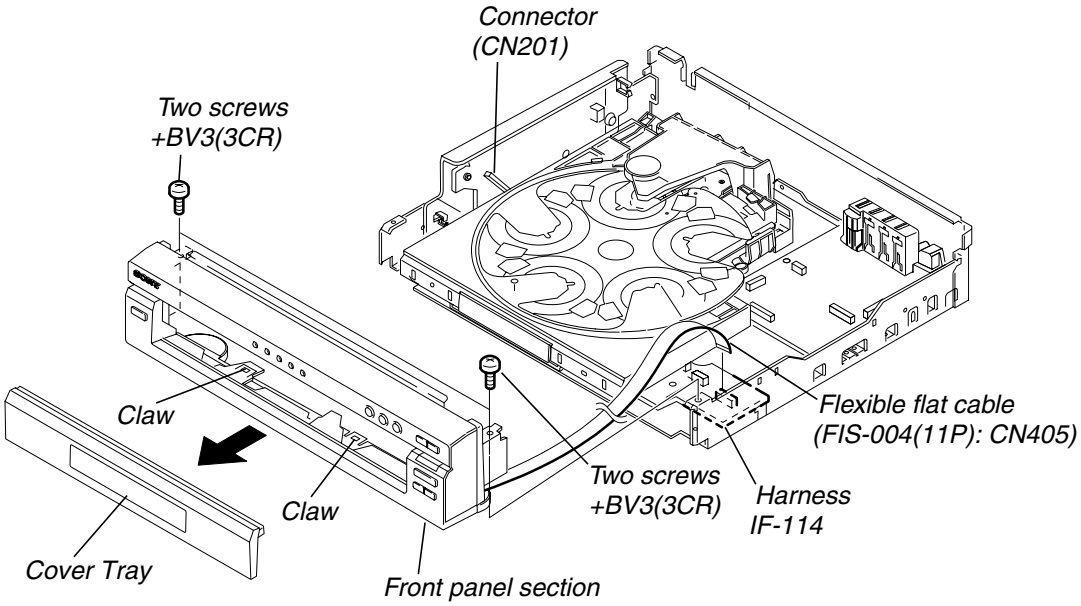

2-4. REAR PANEL SECTION

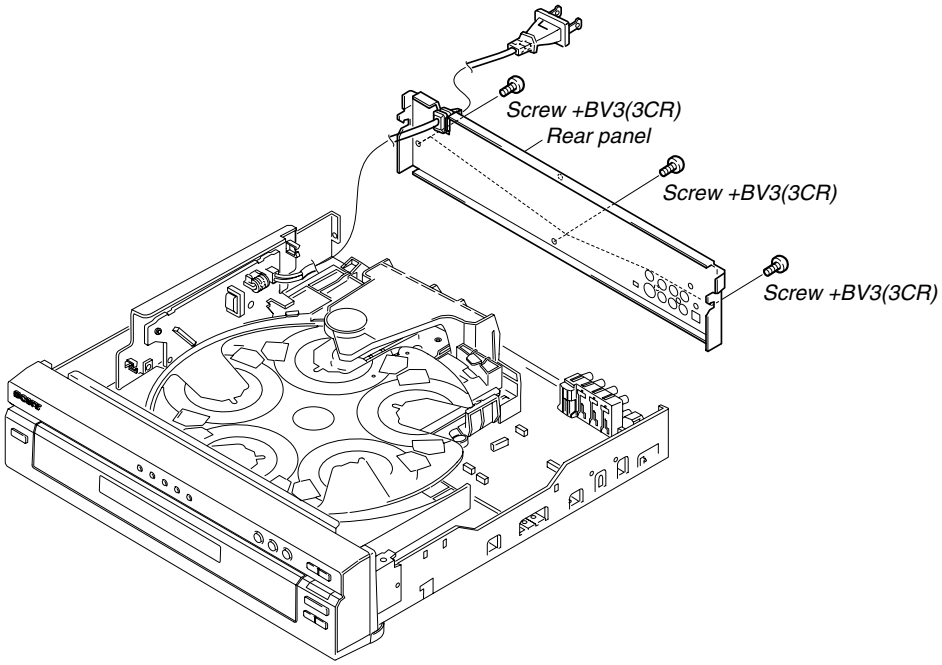

2-5. MV-044 BOARD

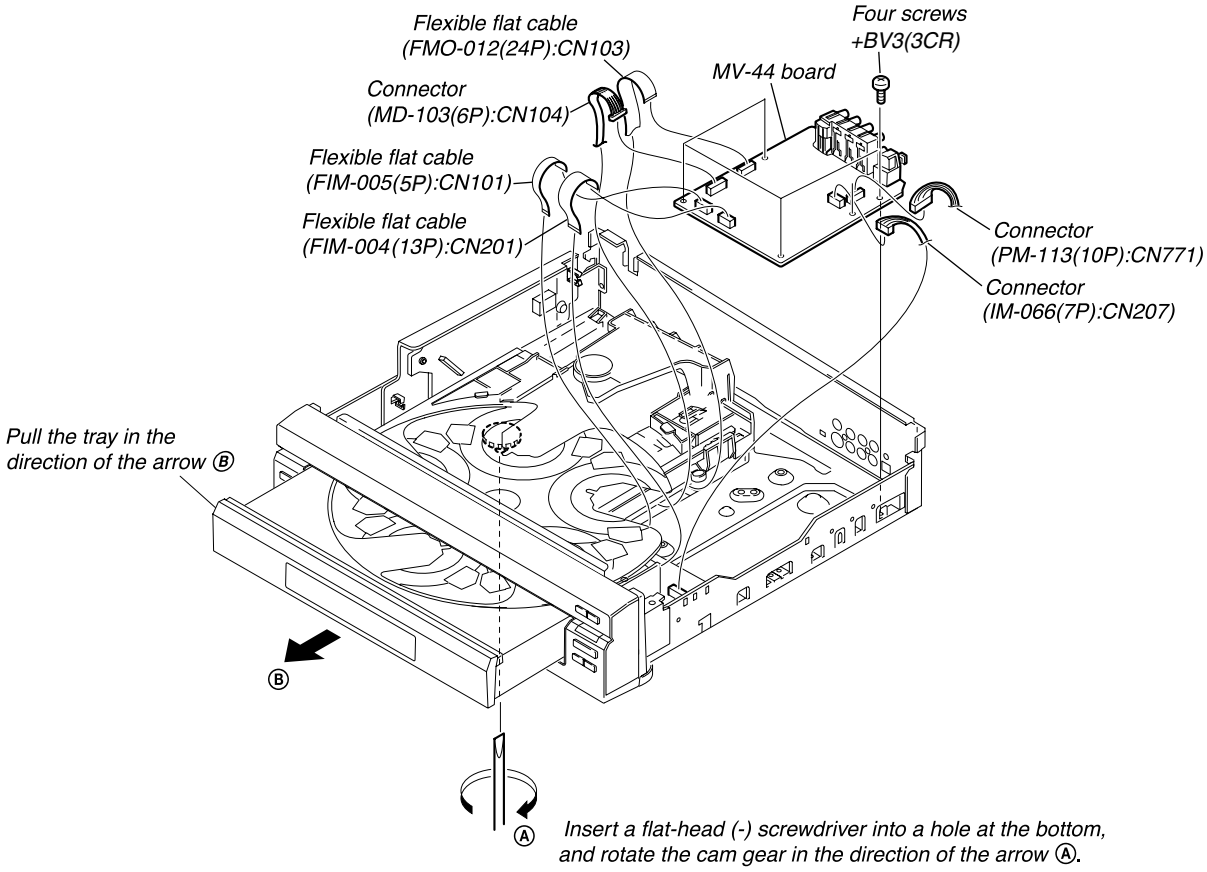

2-6. IF-114 BOARD

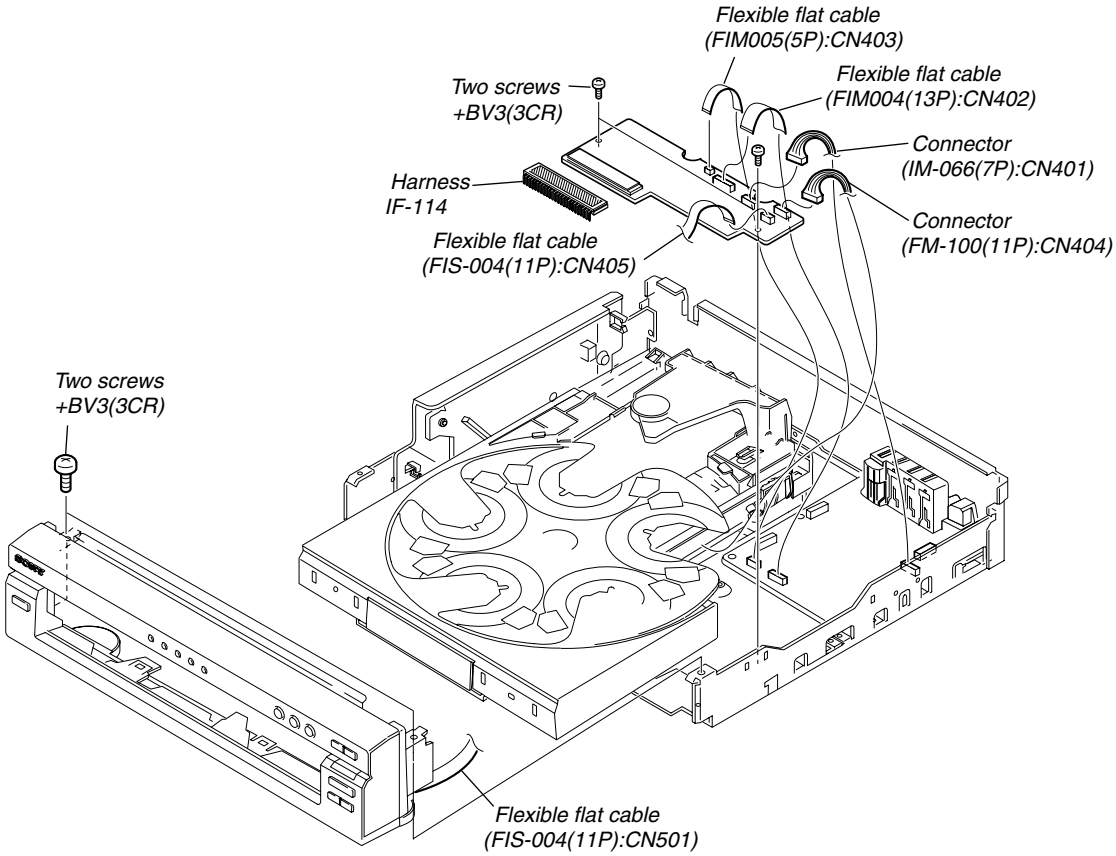

2-7. TABLE ASS'Y

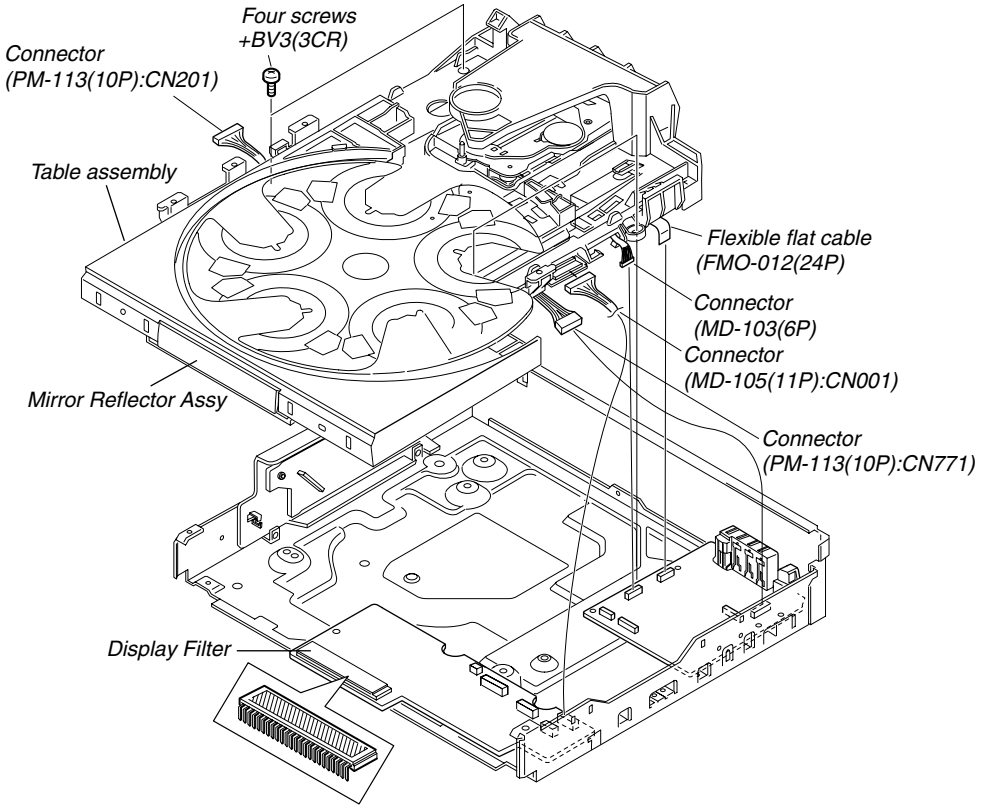

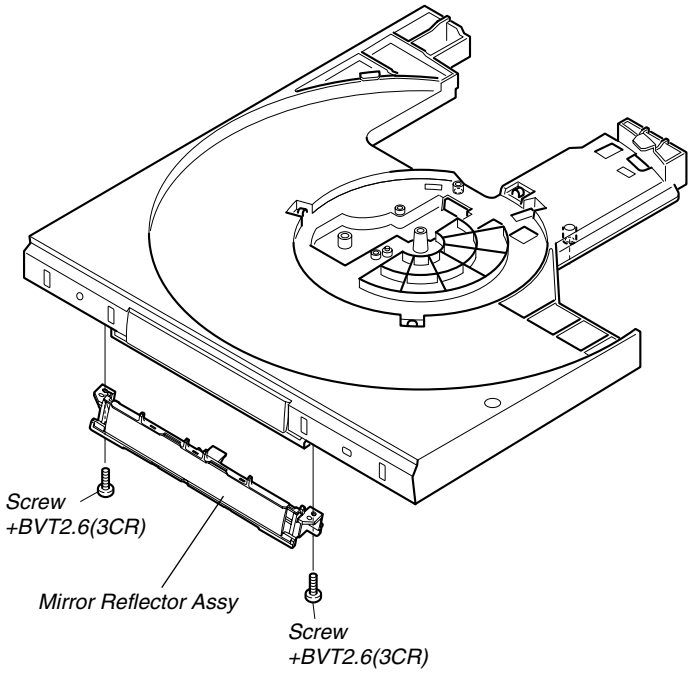

2-8. LOADING MOTOR ASS'Y

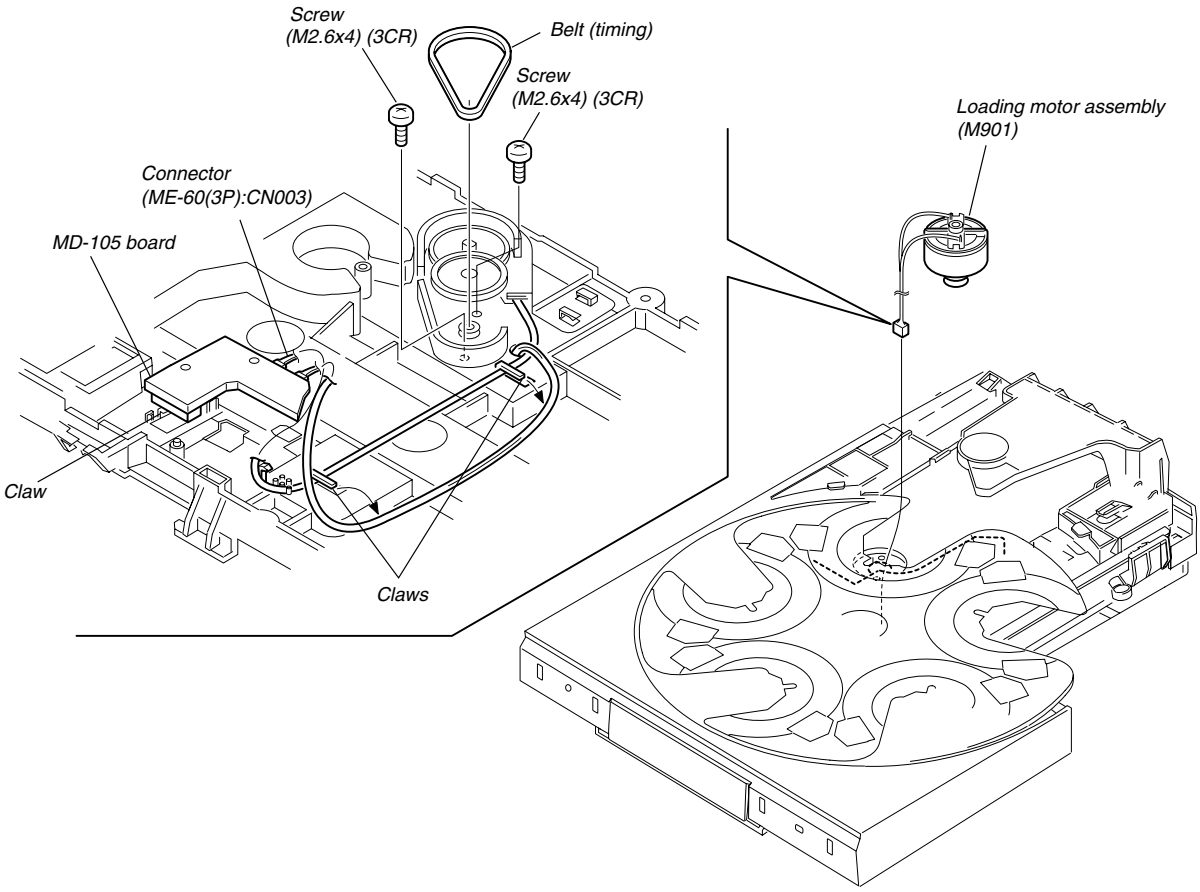

2-9. OPTICAL PICK-UP

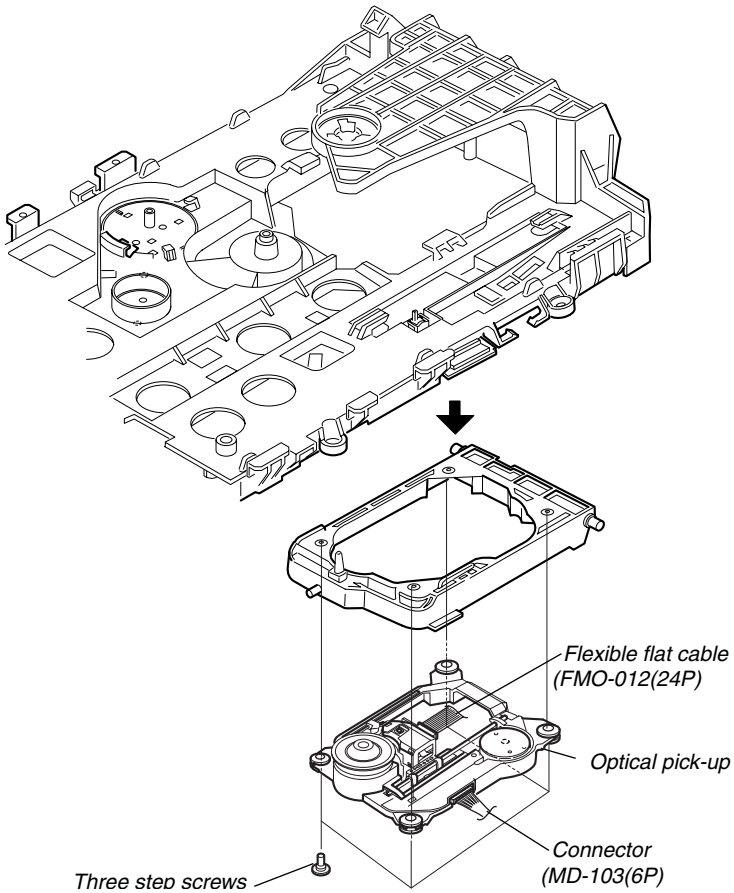

2-10. POWER BLOCK

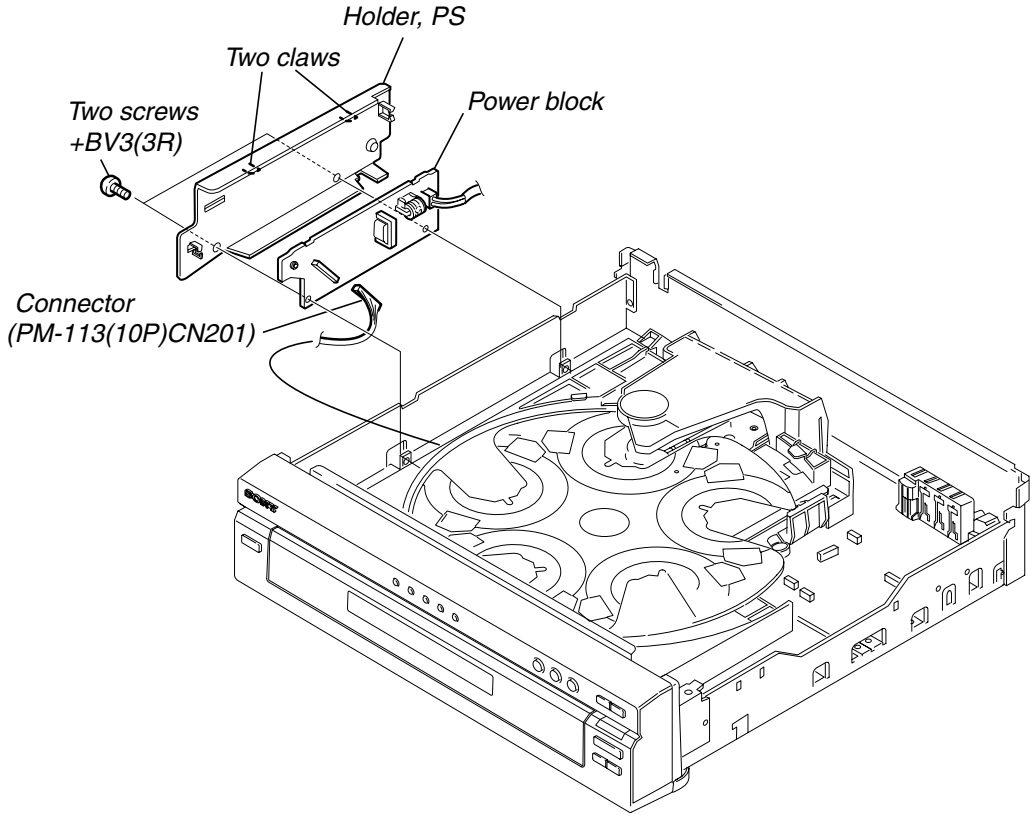

2-11. IF-114 AND FR-218 BOARDS

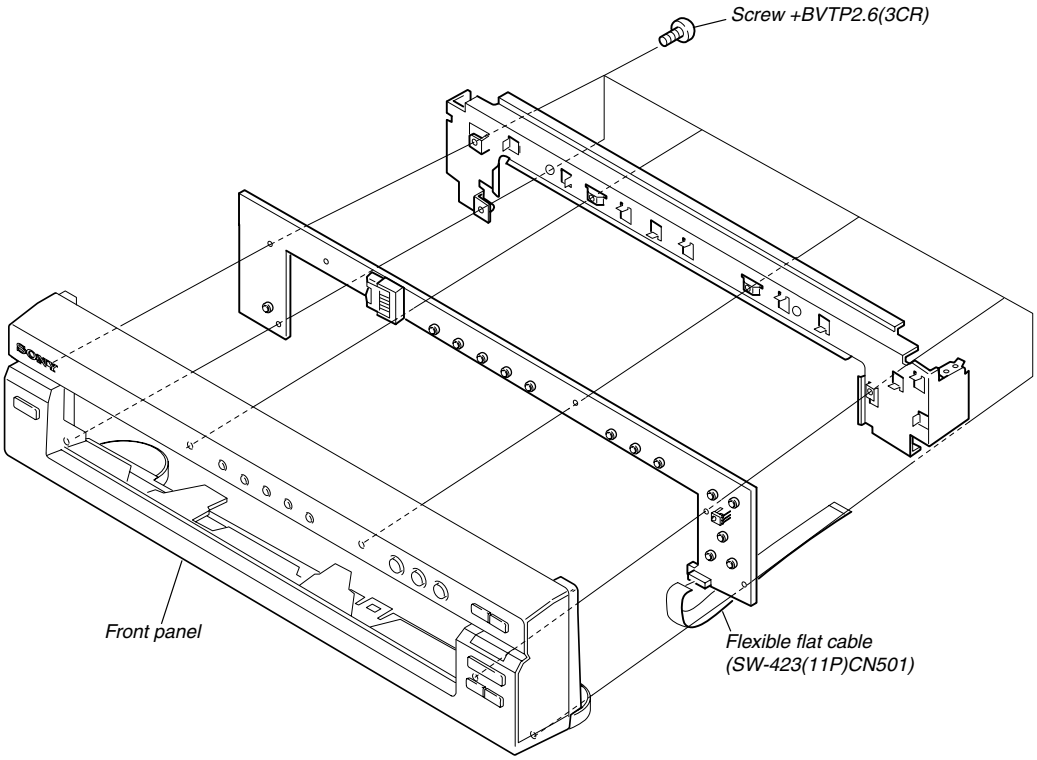

2-12. INTERNAL VIEWS

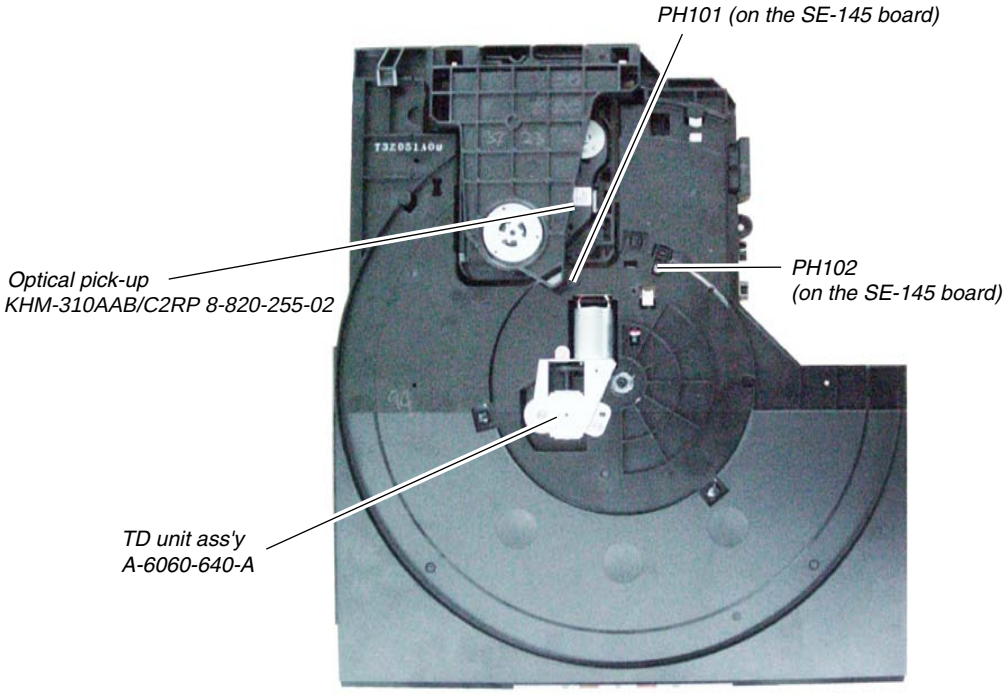

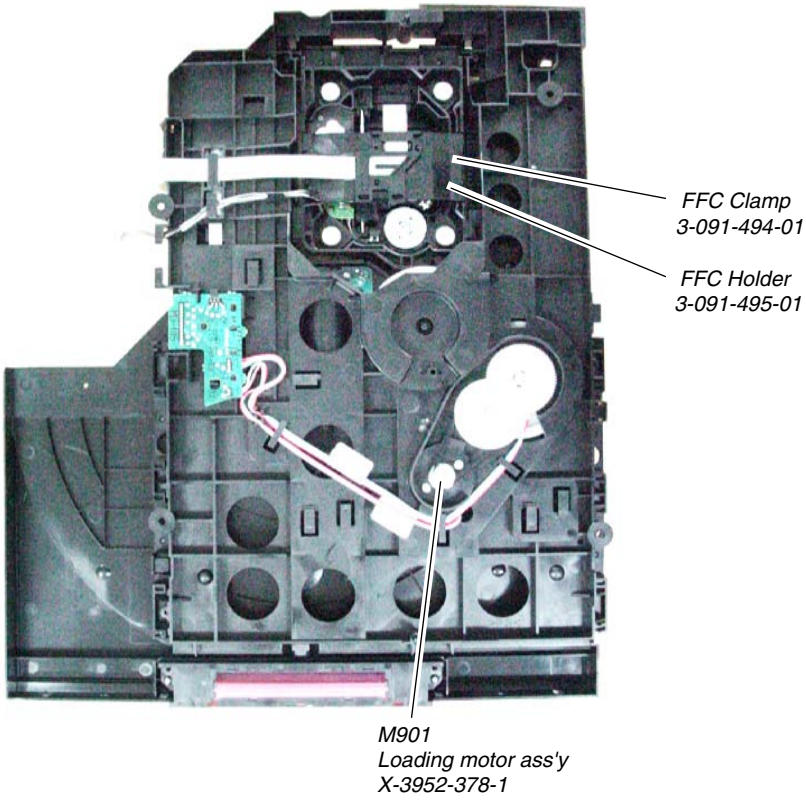

2-13. CIRCUIT BOARDS LOCATION

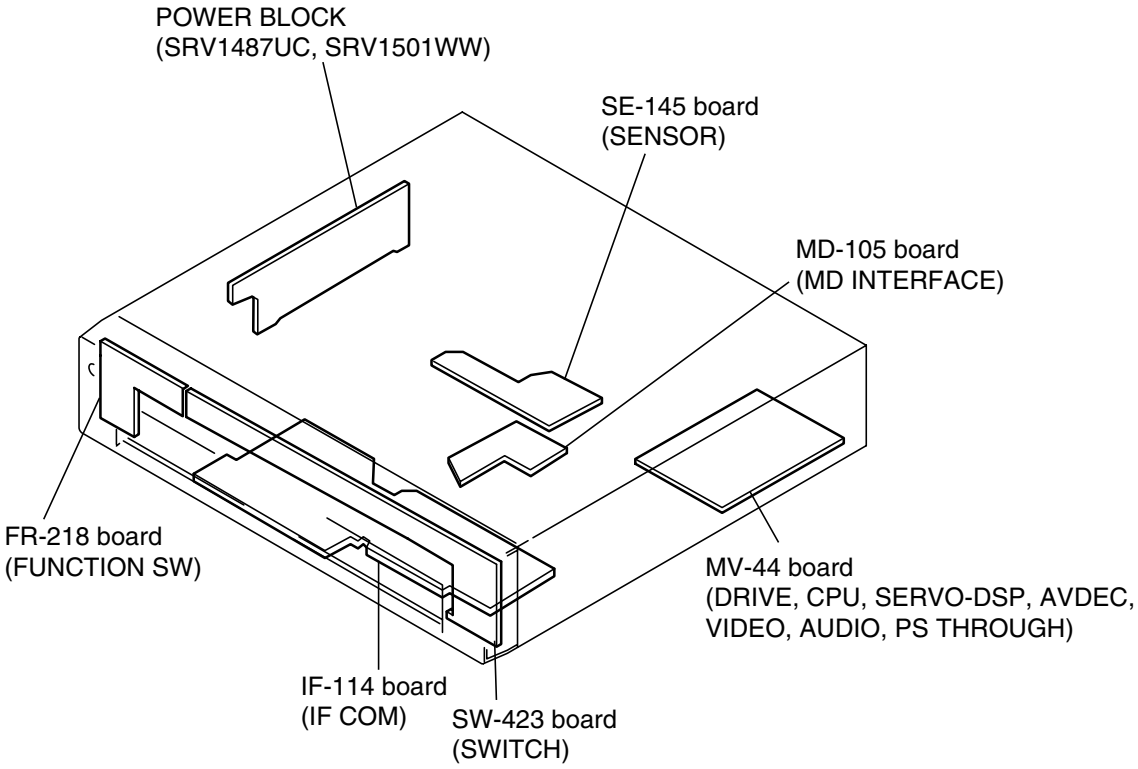

SECTION 3
BLOCK DIAGRAMS

3-1. OVERALL BLOCK DIAGRAM

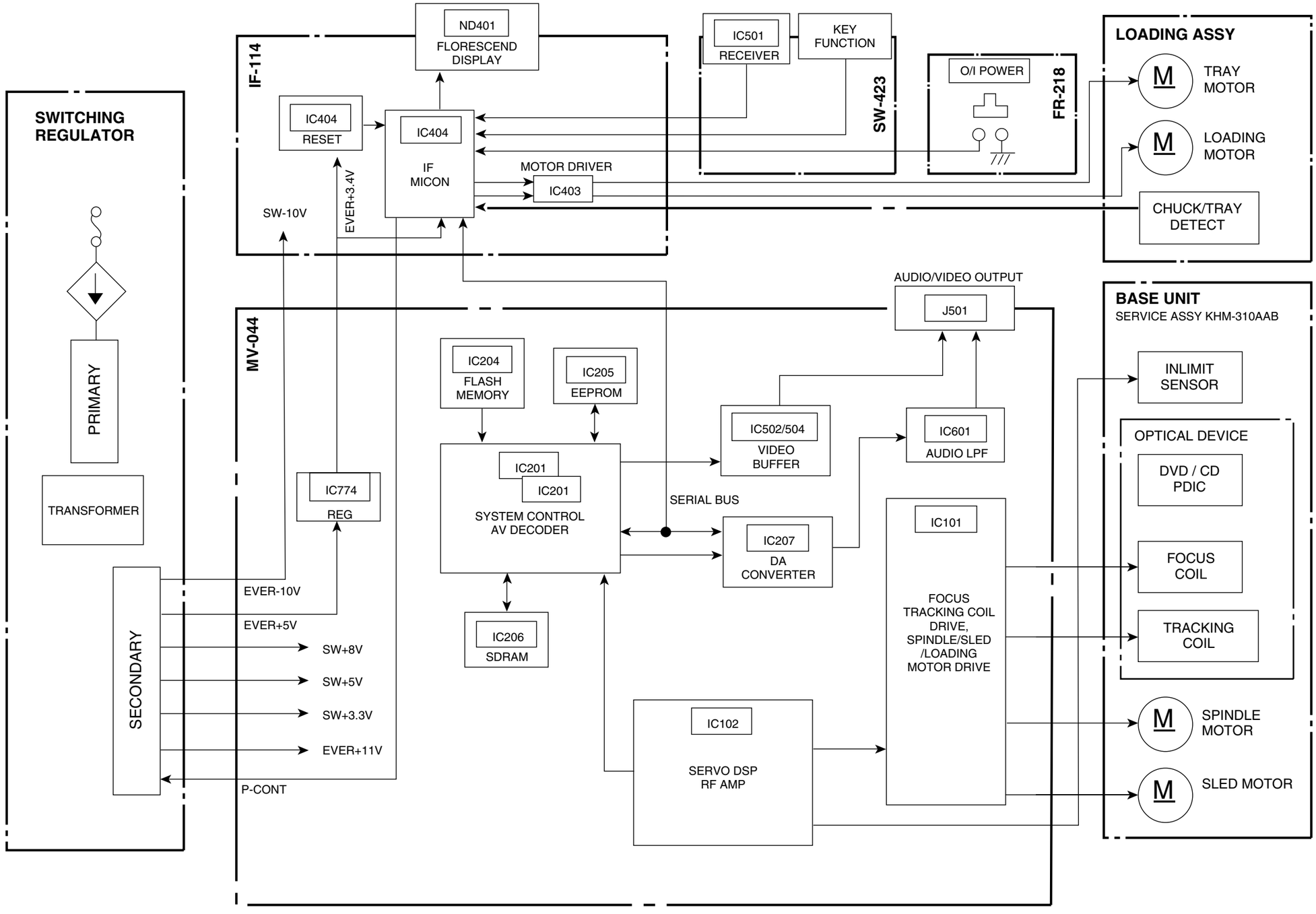

Notes:

MV-44 mounted PWB must be replaced if IC205 (EEPROM IC) is damaged or not functioning.

The old MV-44 mounted PWB must be completely disposed.

3-2. SYSTEM CONTROL/SIGNAL PROCESSOR BLOCK DIAGRAM

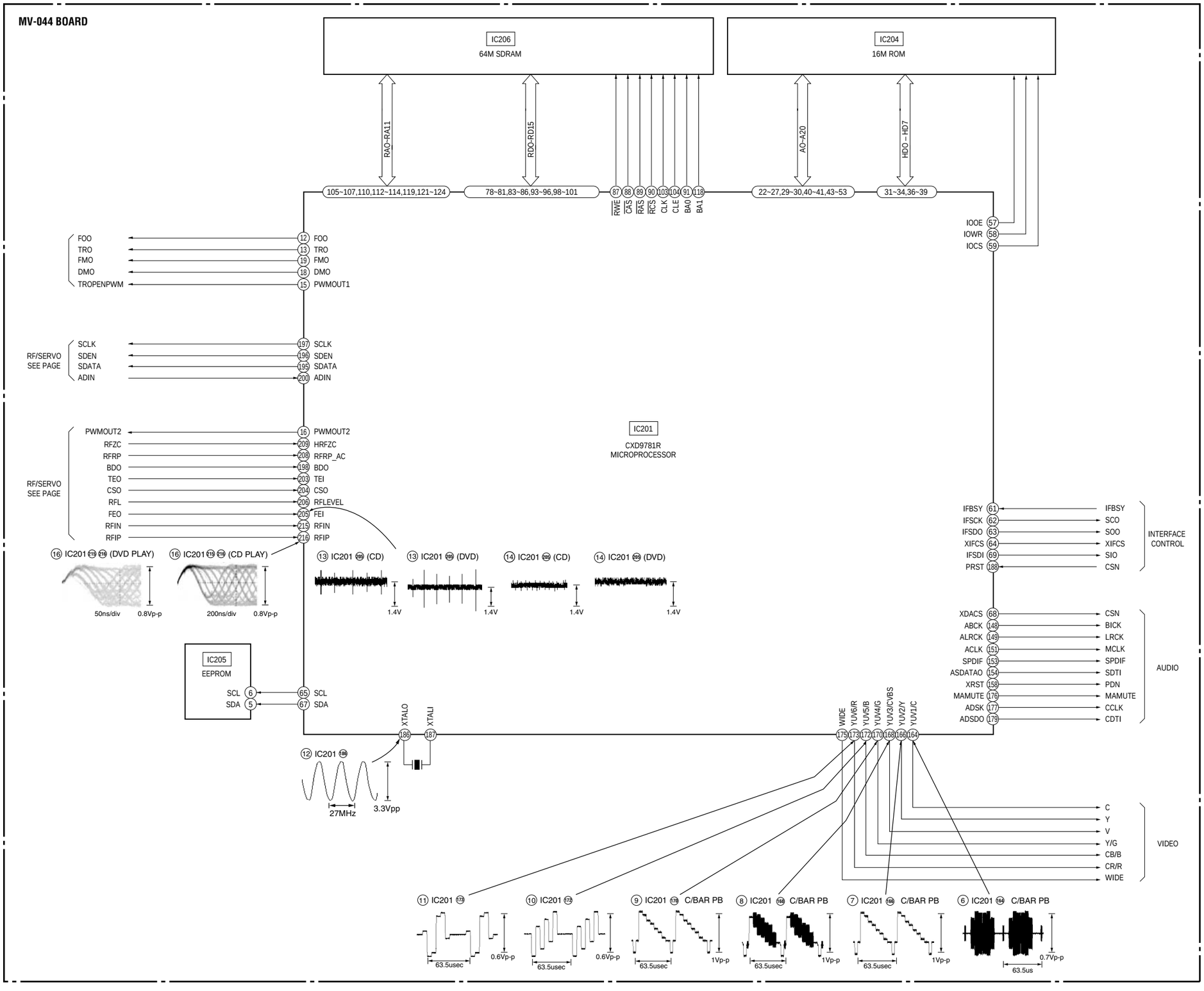

3-3. RF/SERVO BLOCK DIAGRAM

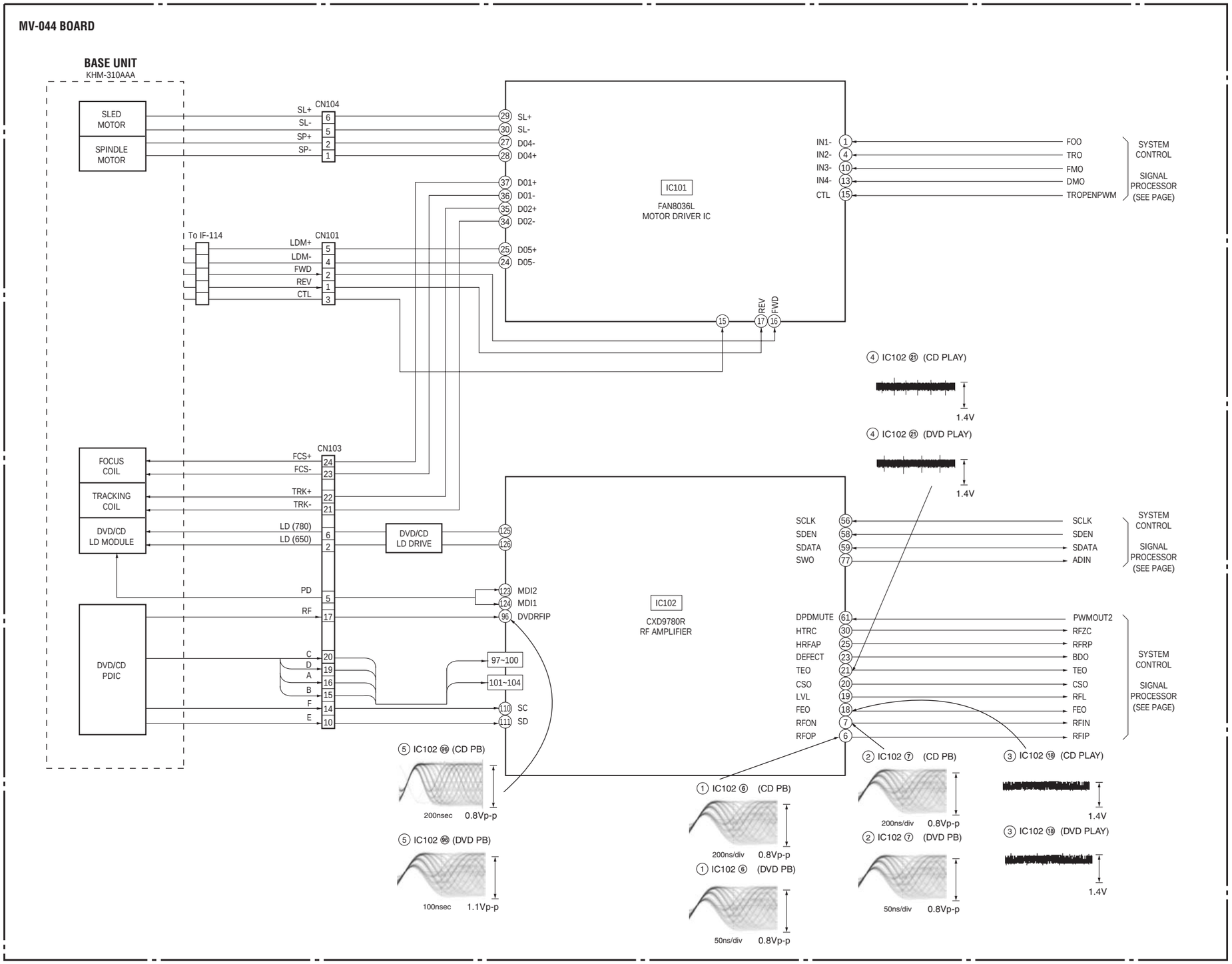

3-4. AUDIO BLOCK DIAGRAM

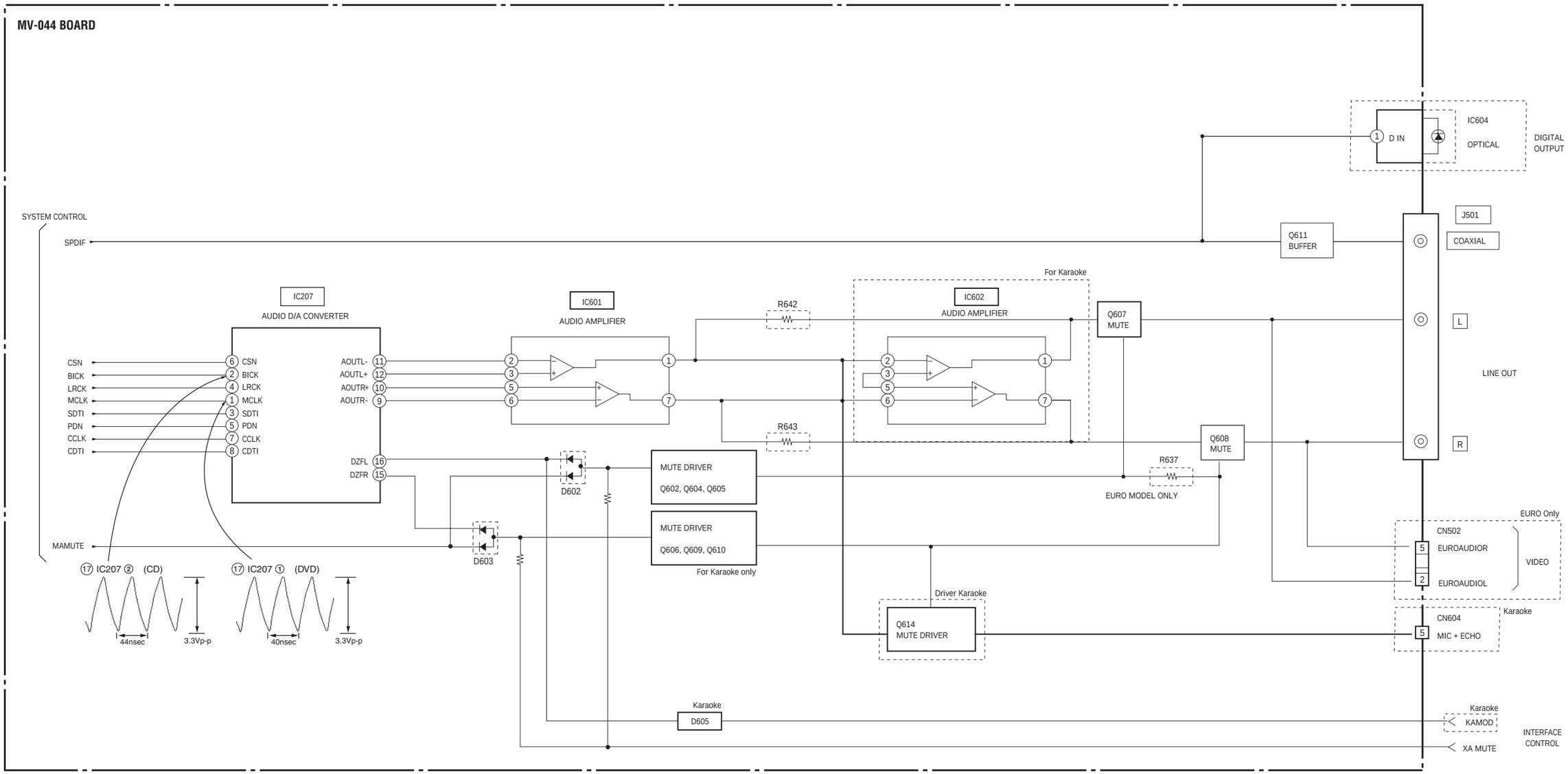

3-5. VIDEO BLOCK DIAGRAM

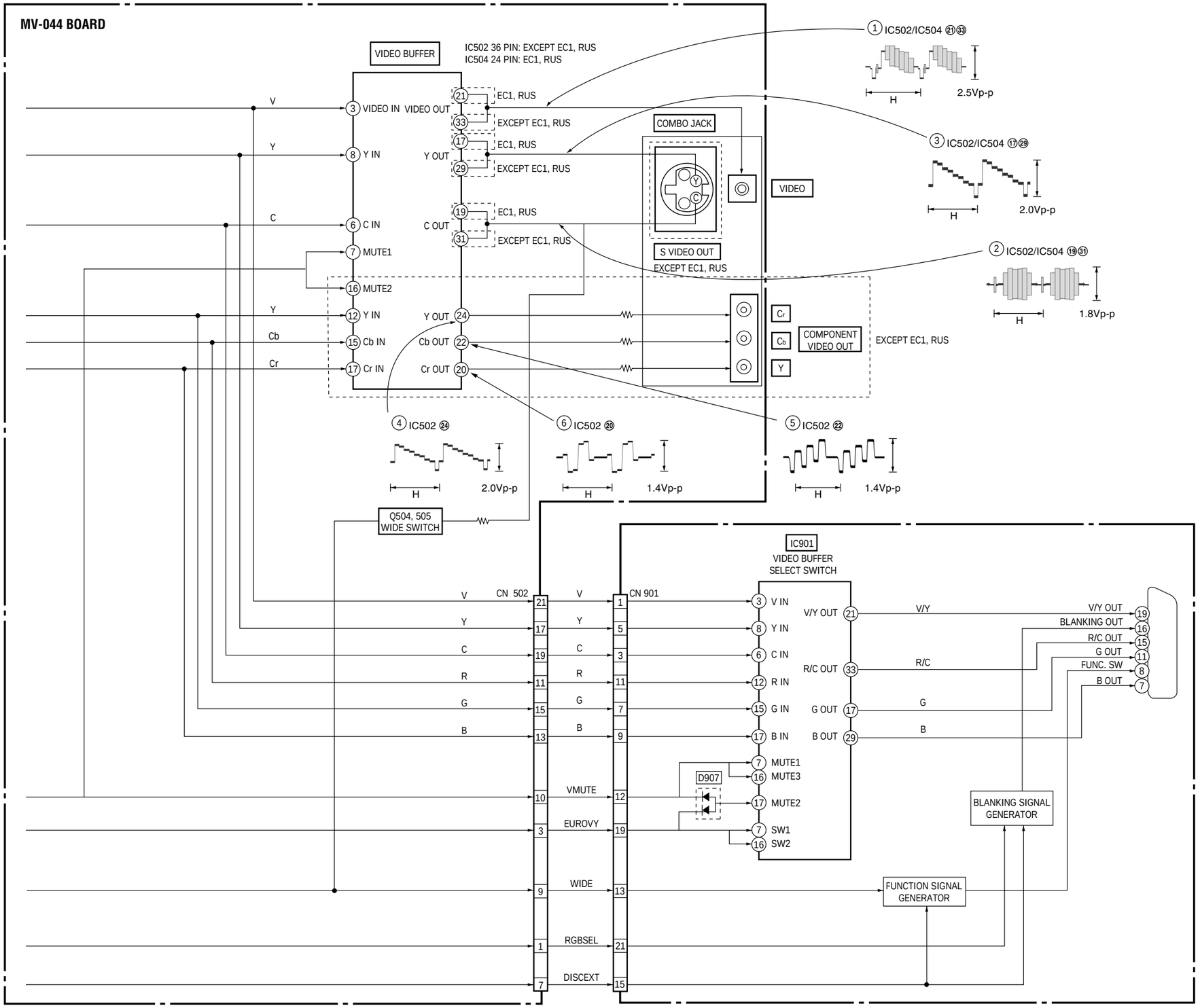

3-6. INTERFACE CONTROL BLOCK DIAGRAM

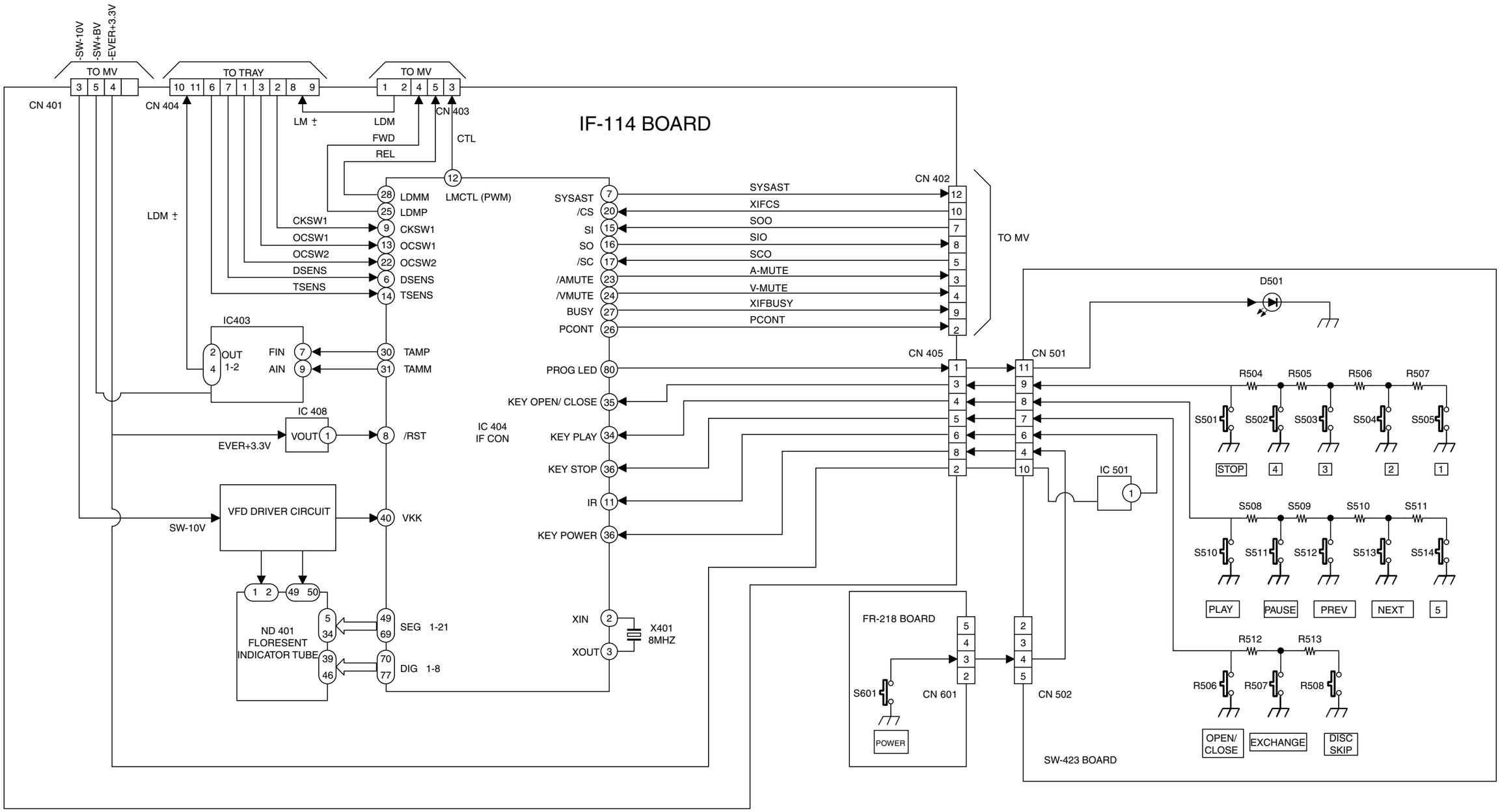

3-7. POWER BLOCK DIAGRAM

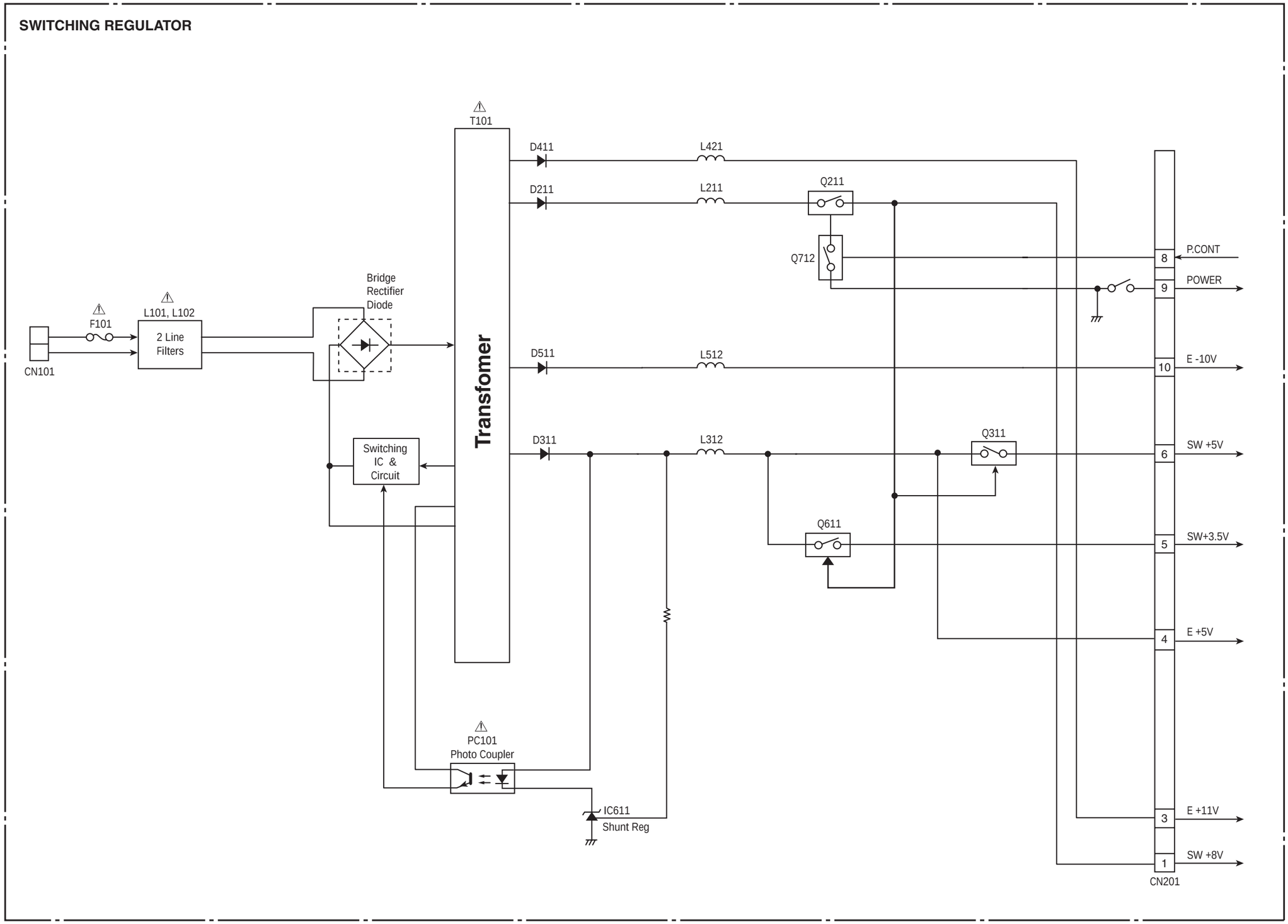

SECTION 4
PRINTED WIRING BOARDS AND SCHEMATIC DIAGRAMS

4-1. FRAME SCHEMATIC DIAGRAM

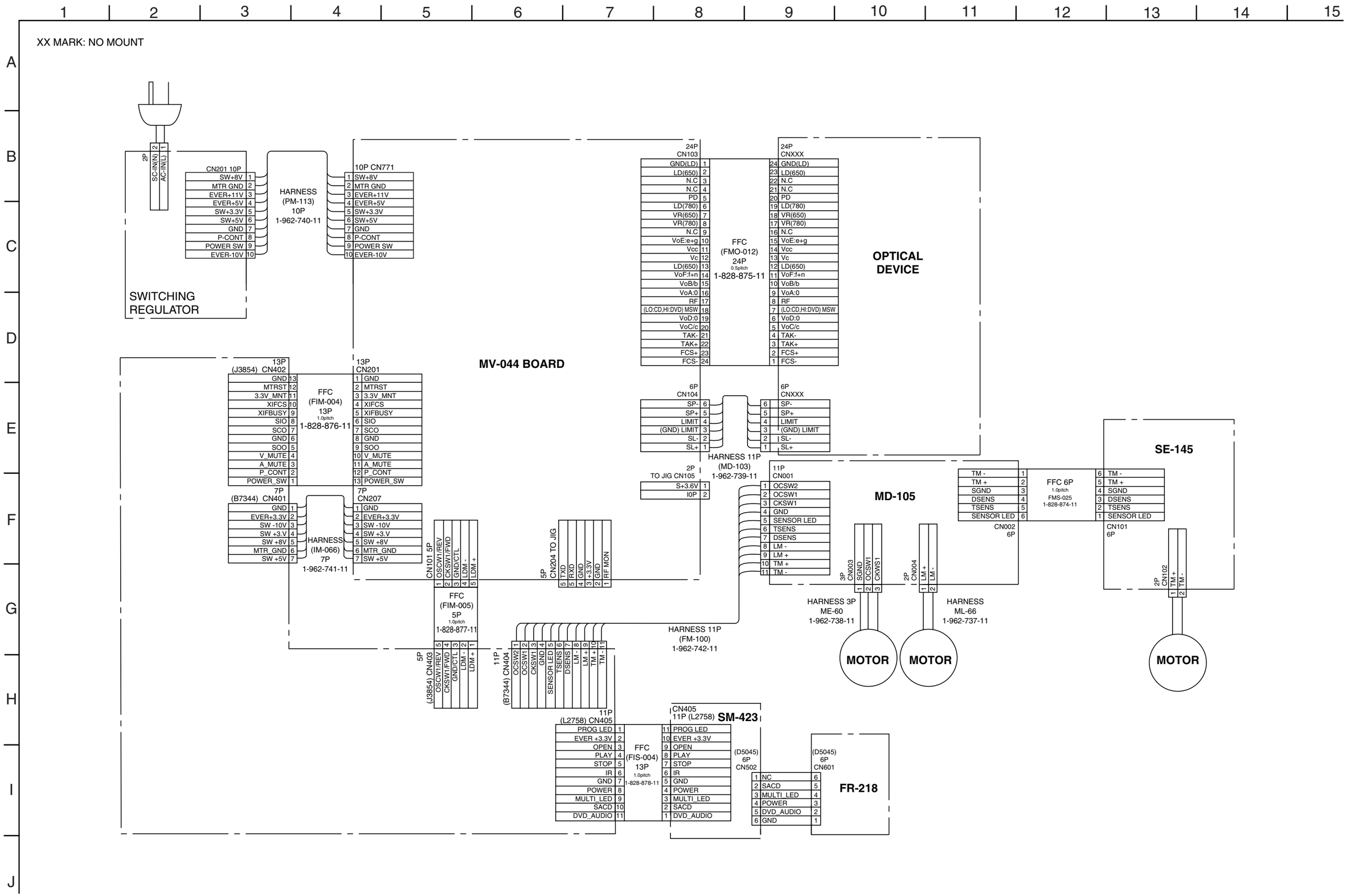

4-2. PRINTED WIRING BOARDS AND SCHEMATIC DIAGRAMS

THIS NOTE IS COMMON FOR WIRING BOARDS AND SCHEMATIC DIAGRAMS
(In addition to this, the necessary note is printed in each block)

(For printed wiring boards)
- ○—— : indicates a lead wire mounted on the component side.
- ●—— : indicates a lead wire mounted on the printed side.
- ○ : Through hole.
- ▭ : Pattern from the side which enables seeing. (The other layers' patterns are not indicated.)

Caution:
Pattern face side: (Side B) Parts on the pattern face side seen from the pattern face are indicated.
Parts face side: (Side A) Parts on the parts face side seen from the parts face are indicated.

- Abbreviation
  - US : USA model
  - CND : Canada model
  - E : Latin model
  - MX : Mexico model
  - SP : General Area model
  - AUS : Australia model

(For schematic diagrams)
- All capacitors are in μF unless otherwise noted. pF : μμF. 50V or less are not indicated except for electrolytics and tantalums.
- All resistors are in ohms, 1/4 W (Chip resistors : 1 /10 W) unless otherwise specified. kΩ=1000Ω, MΩ=1000kΩ.
- Caution when replacing chip parts. New parts must be attached after removal of chip. Be careful not to heat the minus side of tantalum capacitor, because it is damaged by the heat.
- All variable and adjustable resistors have characteristic curve B, unless otherwise noted.
- : non flammable resistor
- : fusible resistor
- : panel designation
- △ : internal component.
- : adjustment for repair.
- B+ : B+ Line
- B– : B– Line
- Circled numbers refer to waveforms.
- Voltages are dc between measurement point.
- Readings are taken with a color-bar signals on DVD refer-ence disc and when playing CD reference disc.
- Readings are taken with a digital multimeter (DC 10MW).
- Voltage variations may be noted due to normal production tolerances.

Note :	**Note :**
The components identified by mark ⚠ or dotted line with mark ⚠ are critical for safety. Replace only with part number specified.	Les composants identifiés par une marque ⚠ sont critiques pour la sécurité. Ne les remplacer que par une pièce portant le numéro spécifié.

When indicating parts by reference number, please include the board name.

4-3. WAVEFORM

MV-044 BOARD

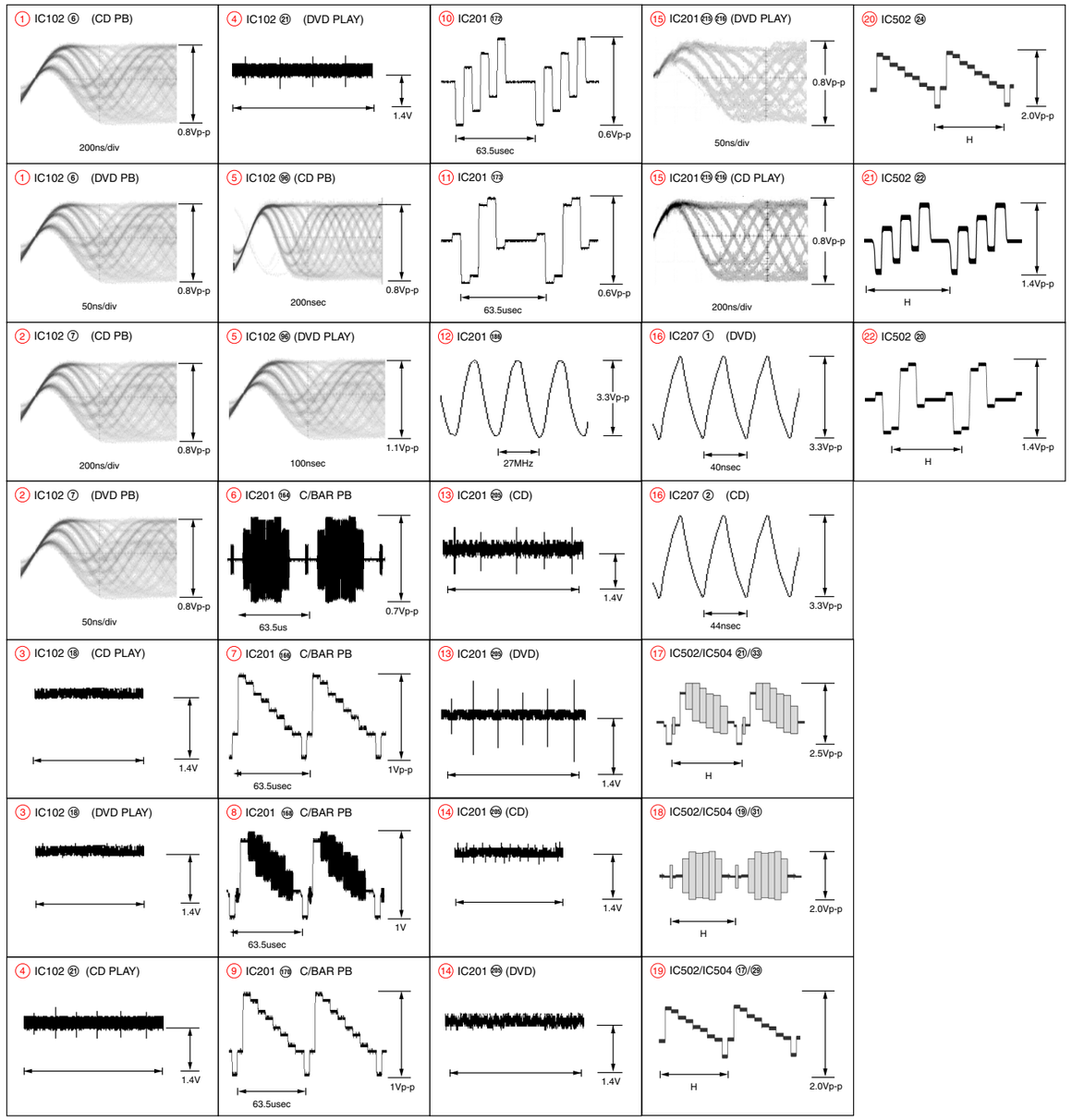

MV-044 (DRIVE, CPU, SERVO-DSP, AVDEC, VIDEO, AUDIO, PS THROUGH) PRINTED WIRING BOARD

• : Uses unleaded solder.

MV-044 BOARD (SIDE A)

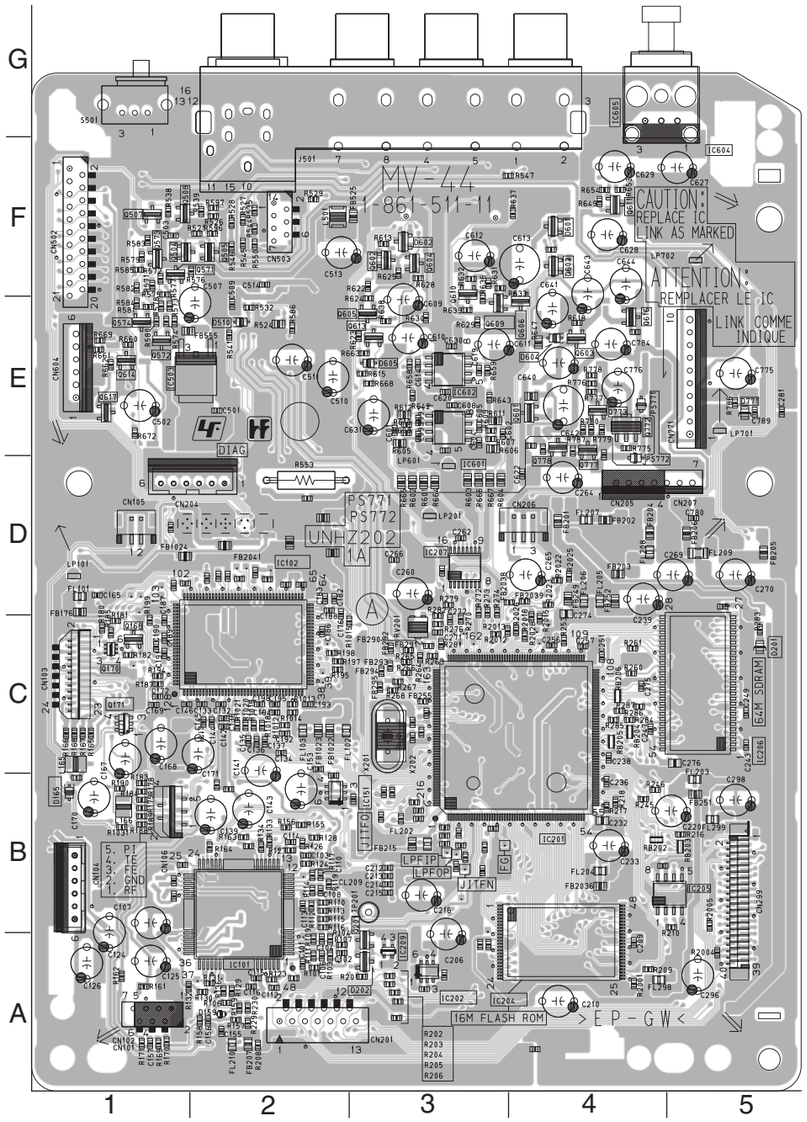

MV-044 BOARD (SIDE B)

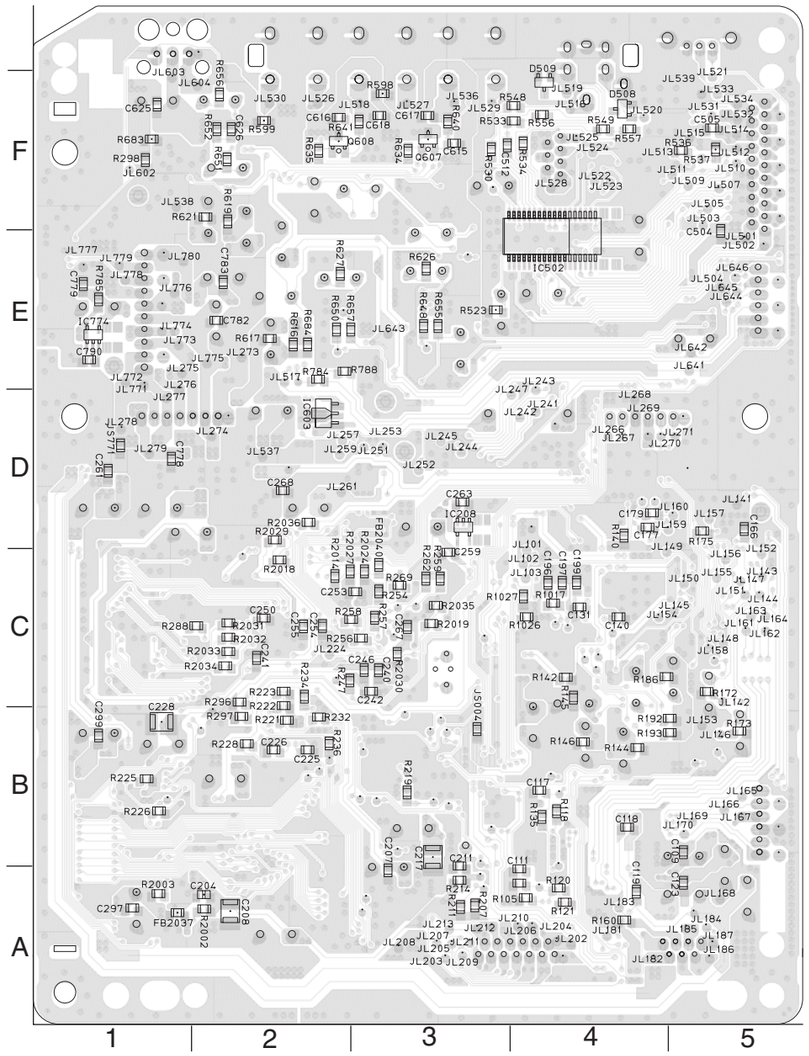

MV-044 BOARD

A SIDE		B SIDE	
IC101	A-2	IC208	D-3
IC102	D-2	IC502	E-4
IC151	B-3	IC603	D-2
IC201	B-4	IC774	E-1
IC202	A-3		
IC204	A-3	Q607	F-3
IC205	B-5	Q608	F-3
IC206	C-5		
IC207	D-3	D508	F-4
IC209	A-3	D509	F-4
IC503	E-1		
IC601	D-3		
IC602	E-3		
IC604	F-5		
IC605	G-4		
Q168	C-1		
Q170	C-1		
Q171	C-1		
Q201	B-3		
Q504	E-1		
Q505	F-2		
Q507	F-1		
Q508	F-2		
Q571	F-2		
Q572	E-1		
Q573	F-1		
Q574	E-1		
Q601	E-4		
Q602	F-3		
Q603	E-4		
Q604	F-3		
Q605	E-3		
Q606	E-4		
Q609	E-3		
Q610	E-3		
Q611	F-4		
Q613	E-3		
Q614	E-1		
Q616	E-4		
Q617	E-1		
Q772	E-4		
Q773	E-4		
Q777	D-4		
Q778	D-4		
D165	B-1		
D201	C-5		
D202	A-3		
D510	E-2		
D601	F-4		
D602	F-3		
D603	F-4		
D604	F-4		
D605	E-3		
D771	E-5		

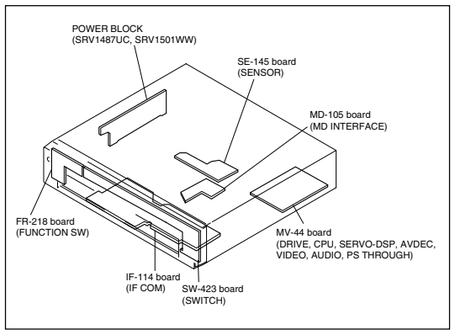

For printed wiring board

There are a few cases that the part printed on this diagram isn't mounted in this model.

DVP-NC675P

For Schematic Diagram

- Refer to page 4-5 for printed wiring board of MV-044 board.
- Refer to page 4-4 for waveform

MV-044 BOARD (1/5)
DRIVE
-REF.NO.:1000 SERIES-
XX MARK:NO MOUNT

NO MARK:REC/PB MODE

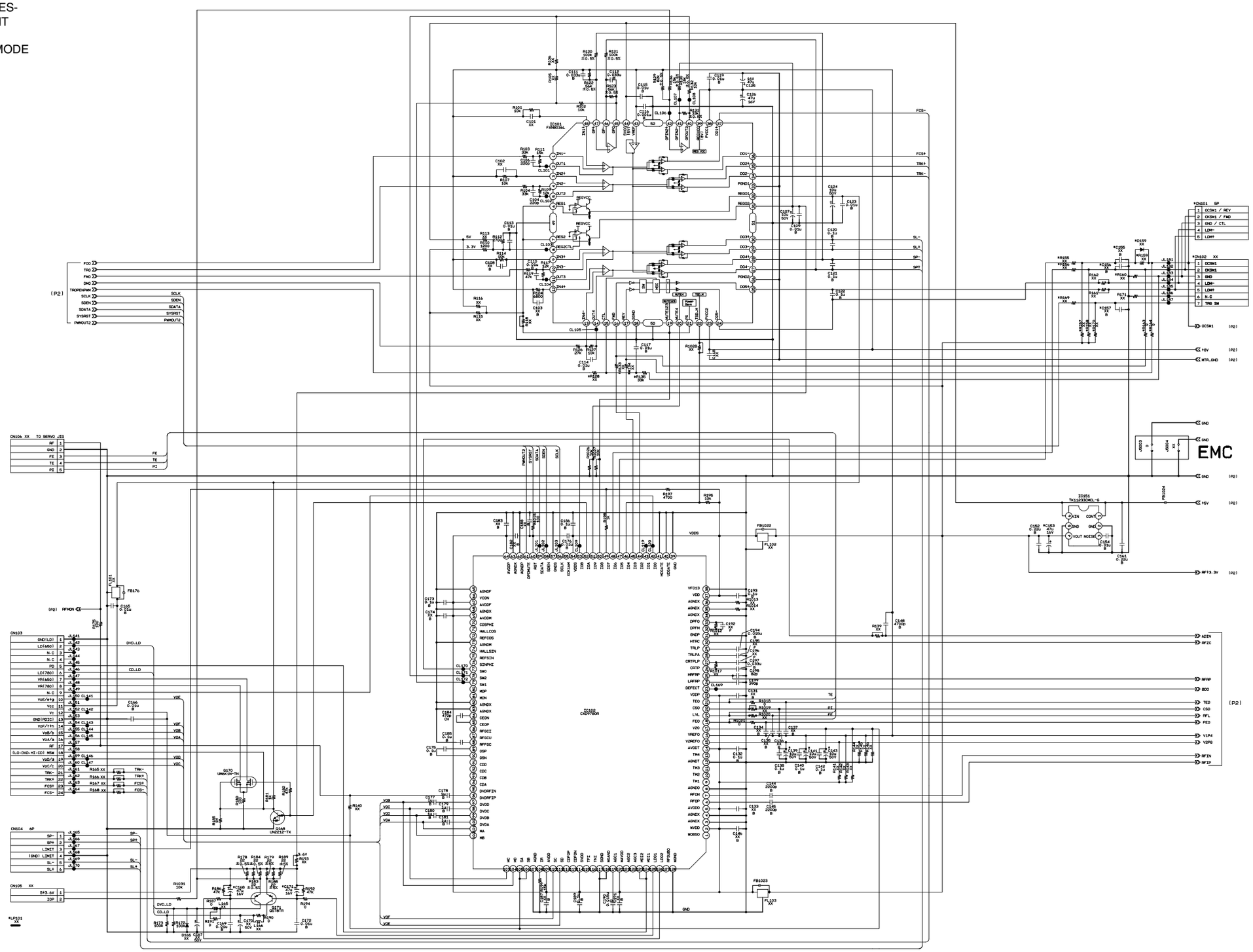

DRIVE
MV-044 (1/5)

For Schematic Diagram

- Refer to page 4-5 for printed wiring board of MV-044 board.
- Refer to page 4-4 for waveform

MV-044 BOARD (2/5)
CPU, SERVO-DSP, AVDEC
-REF.NO.:1000 SERIES-
XX MARK:NO MOUNT

NO MARK:REC/PB MODE

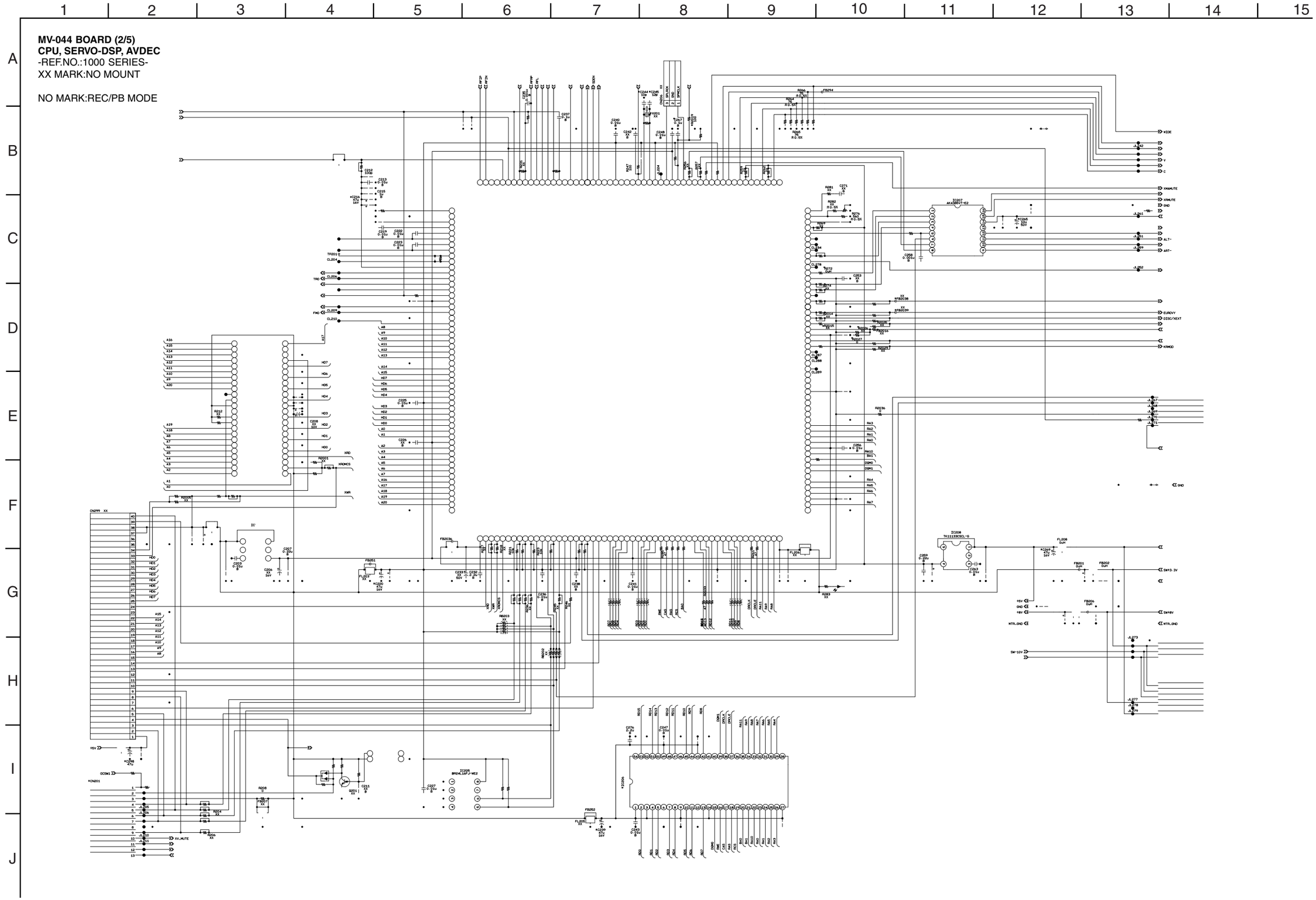

CPU, SERVO-DSP, AVDEC
MV-044 (2/5)

DVP-NC675P

For Schematic Diagram

- Refer to page 4-5 for printed wiring board of MV-044 board.
- Refer to page 4-4 for waveform

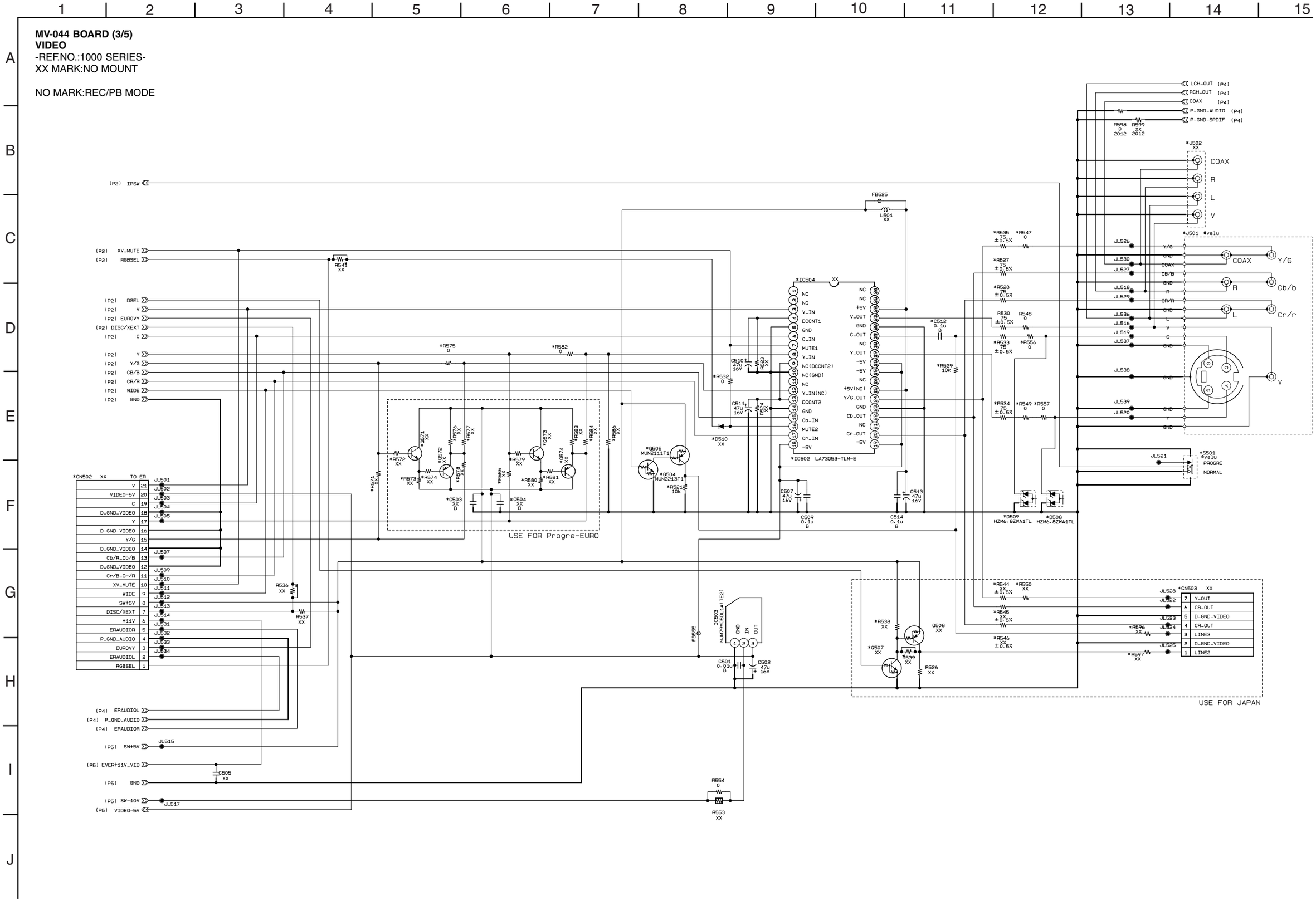

For Schematic Diagram

- Refer to page 4-5 for printed wiring board of MV-044 board.
- Refer to page 4-4 for waveform

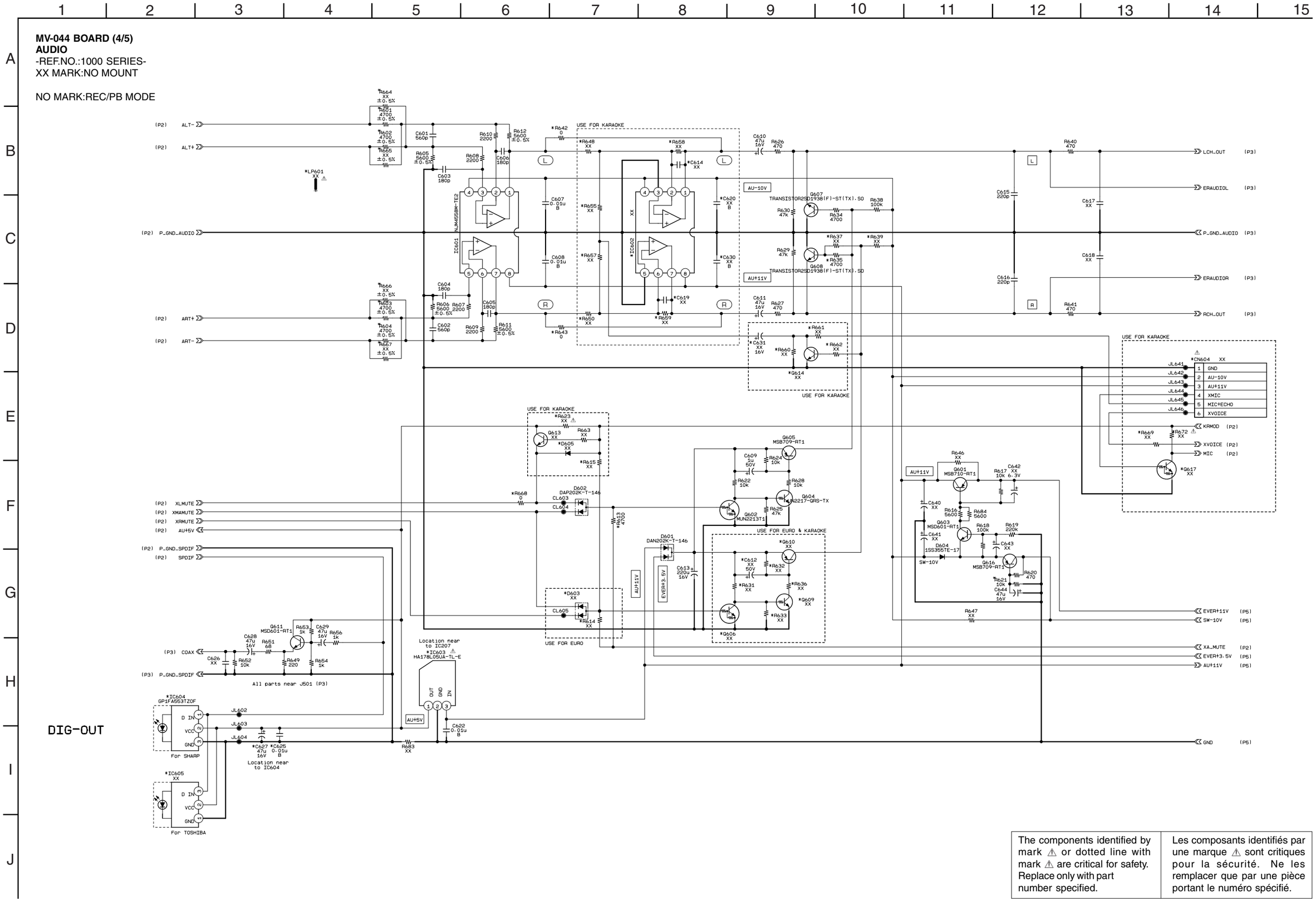

The components identified by mark ⚠ or dotted line with mark ⚠ are critical for safety. Replace only with part number specified.	Les composants identifiés par une marque ⚠ sont critiques pour la sécurité. Ne les remplacer que par une pièce portant le numéro spécifié.

For Schematic Diagram

- Refer to page 4-5 for printed wiring board of MV-044 board.
- Refer to page 4-4 for waveform

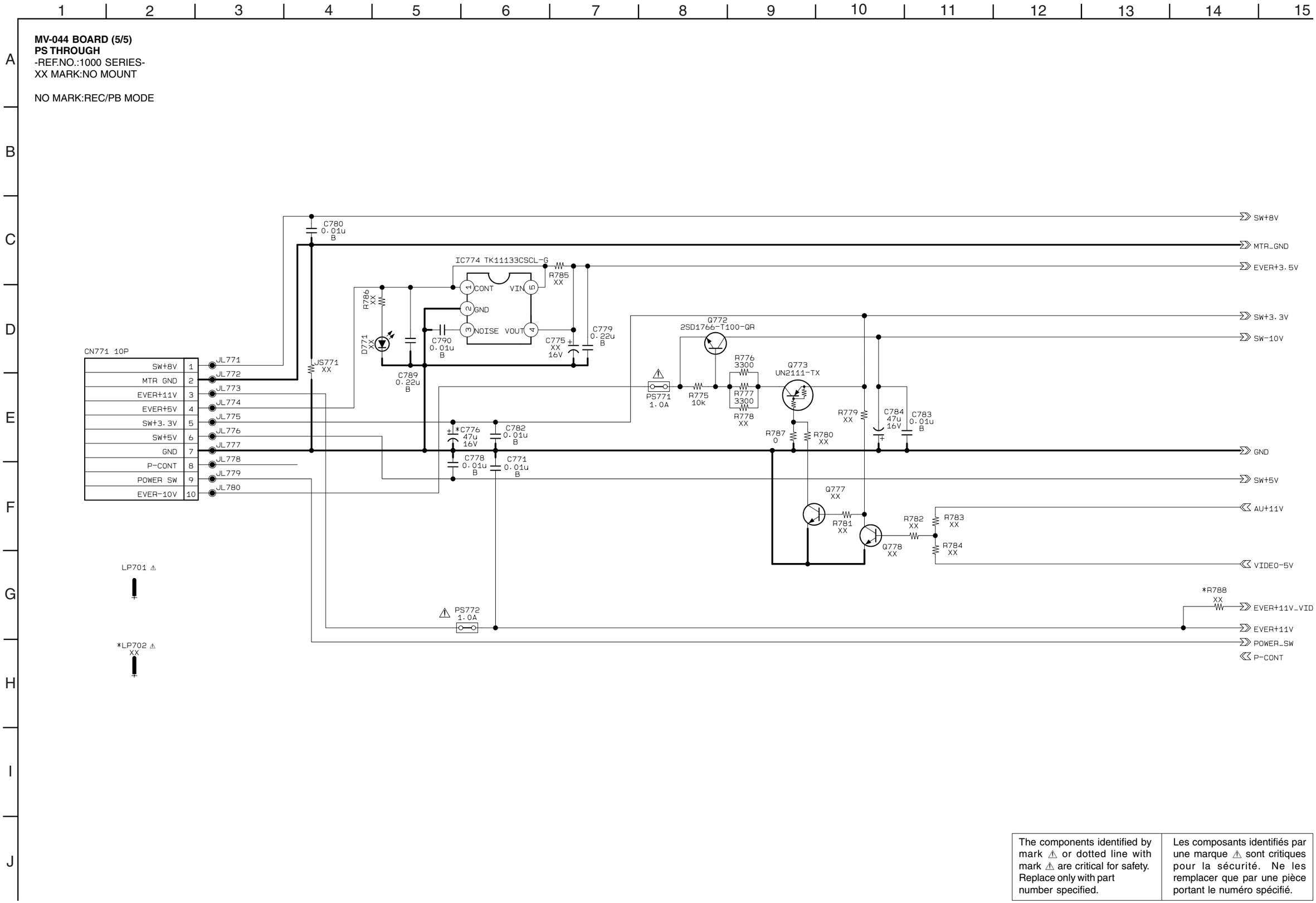

The components identified by mark ⚠ or dotted line with mark ⚠ are critical for safety. Replace only with part number specified.	Les composants identifiés par une marque ⚠ sont critiques pour la sécurité. Ne les remplacer que par une pièce portant le numéro spécifié.

PS THROUGH
MV-044 (5/5)

IF-114 (IF COM) PRINTED WIRING BOARD

• 4F : Uses unleaded solder.

IF-114 BOARD (SIDE A)

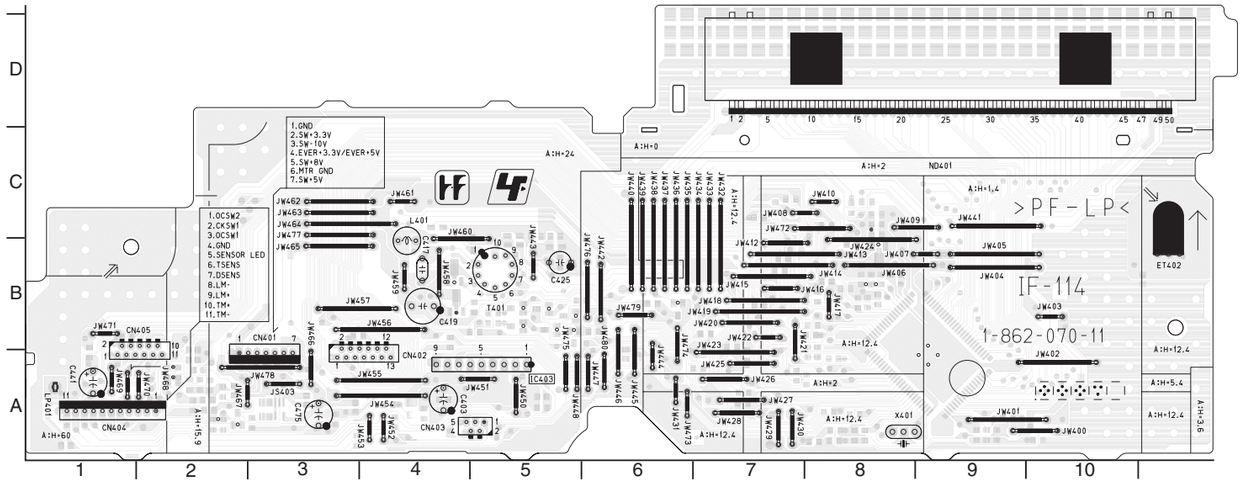

IF-114 BOARD (SIDE B)

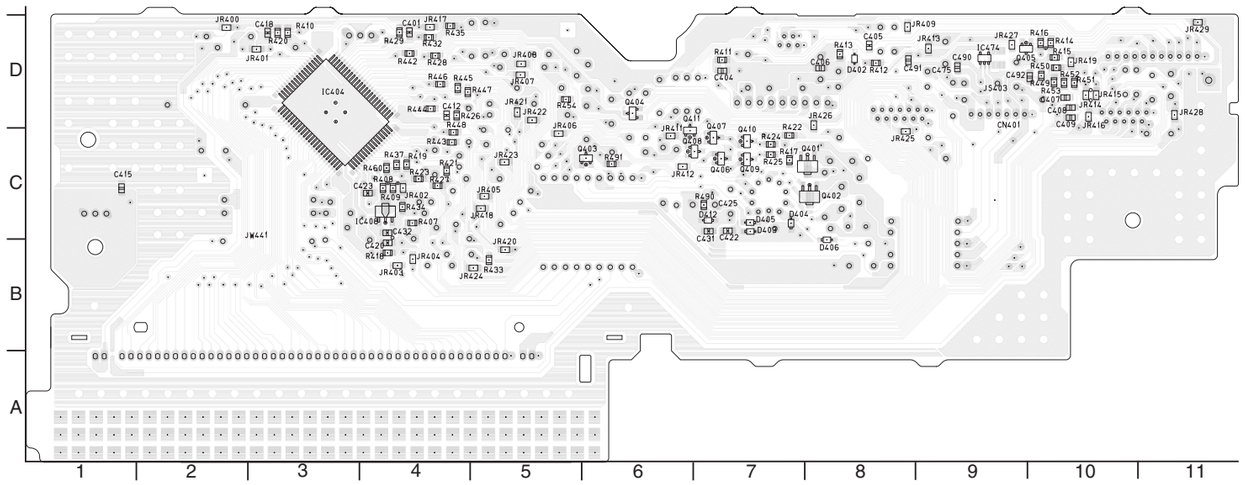

For printed wiring board

There are a few cases that the part printed on this diagram isn't mounted in this model.

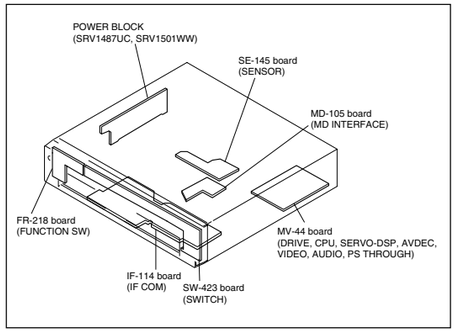

IF-114 BOARD

A SIDE

IC403 A-5

B SIDE

IC404 D-3
IC408 C-4
IC474 D-9

Q401 C-8
Q402 C-8
Q403 C-6
Q404 D-6
Q405 D-9
Q406 C-7
Q407 D-7
Q408 C-6
Q409 C-7
Q410 D-7
Q411 D-6

D402 D-8
D403 C-7
D404 C-7
D405 C-7
D406 B-8
D412 C-7

For Schematic Diagram

• Refer to page 4-17 for printed wiring board of IF-114 board

IF-114 BOARD
IF COM
-REF.NO.: SERIES-
XX MARK:NO MOUNT

NO MARK:REC/PB MODE
* :Cannot be measured

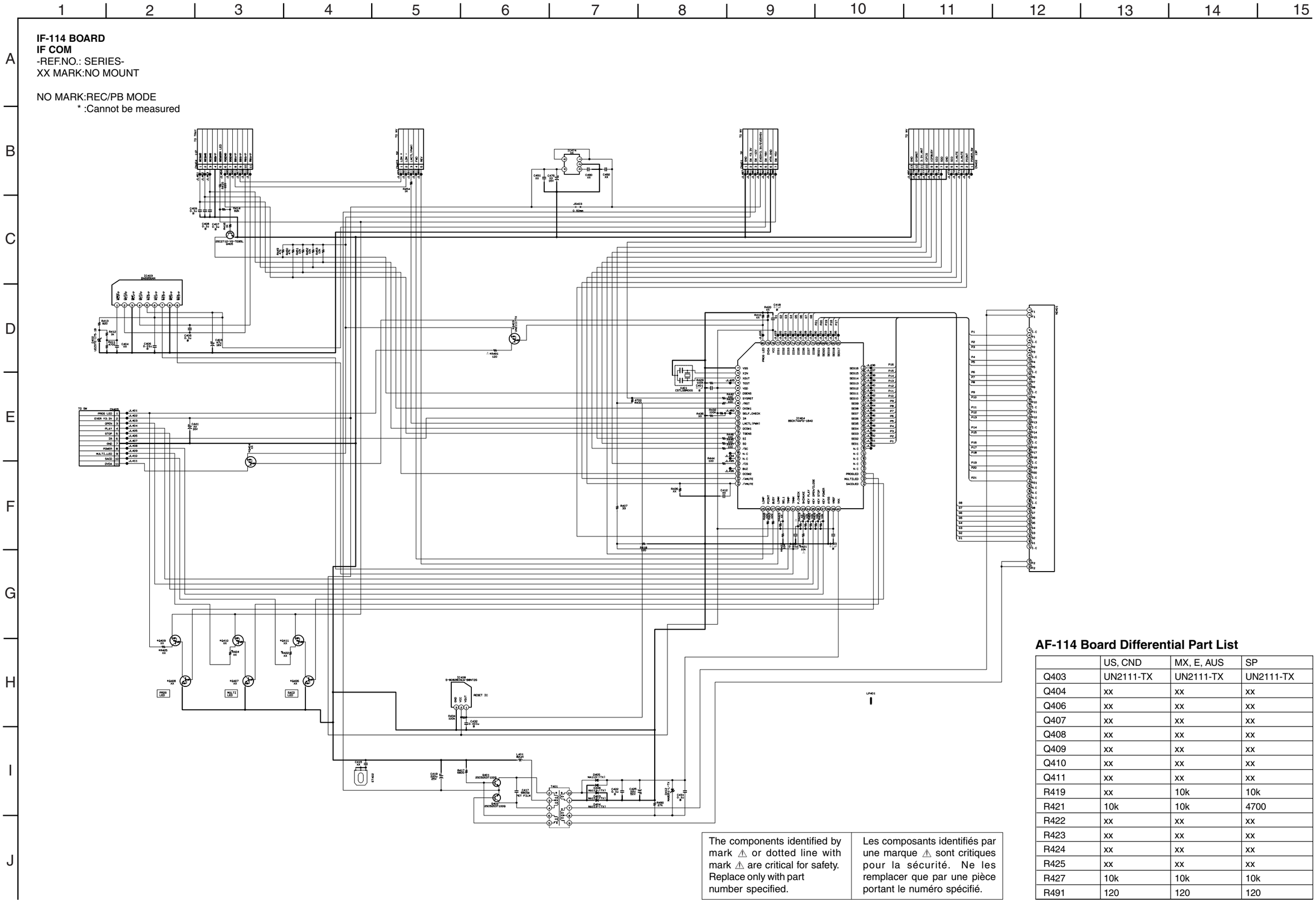

The components identified by mark ⚠ or dotted line with mark ⚠ are critical for safety. Replace only with part number specified.	Les composants identifiés par une marque ⚠ sont critiques pour la sécurité. Ne les remplacer que par une pièce portant le numéro spécifié.

AF-114 Board Differential Part List

	US, CND	MX, E, AUS	SP
Q403	UN2111-TX	UN2111-TX	UN2111-TX
Q404	xx	xx	xx
Q406	xx	xx	xx
Q407	xx	xx	xx
Q408	xx	xx	xx
Q409	xx	xx	xx
Q410	xx	xx	xx
Q411	xx	xx	xx
R419	xx	10k	10k
R421	10k	10k	4700
R422	xx	xx	xx
R423	xx	xx	xx
R424	xx	xx	xx
R425	xx	xx	xx
R427	10k	10k	10k
R491	120	120	120

SW-423 (SWITCH) PRINTED WIRING BOARDS

• : Uses unleaded solder.

SW-423 BOARD (SIDE A)

For printed wiring board

There are a few cases that the part printed on this diagram isn't mounted in this model.

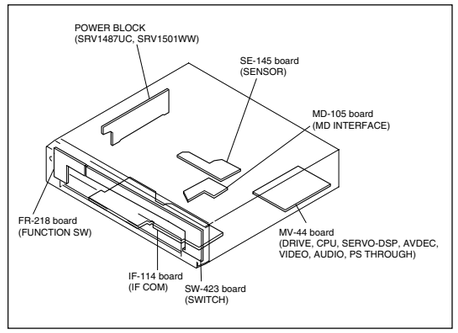

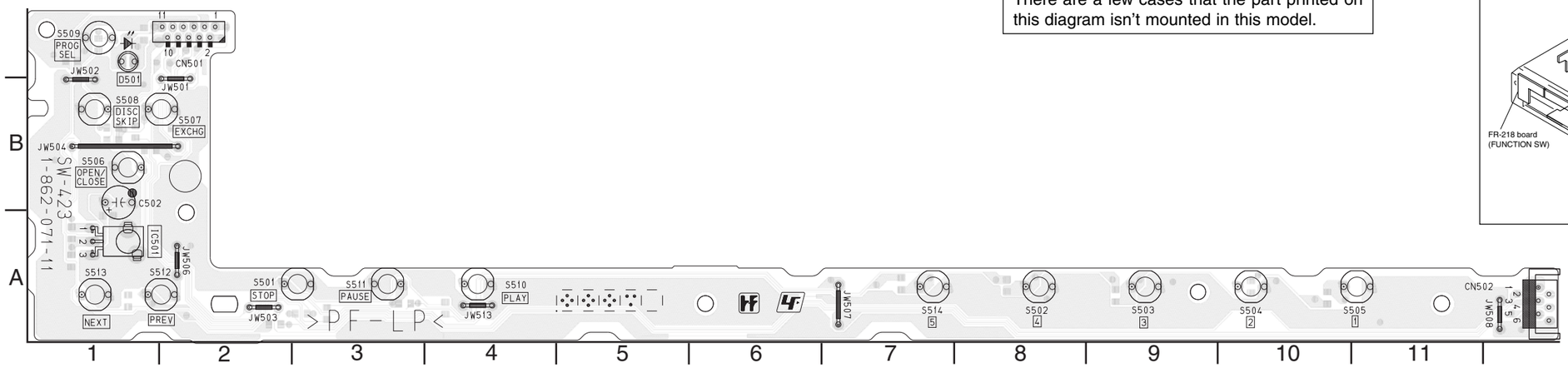

SW-423 BOARD

A SIDE

IC501	A-1
D501	B-1

B SIDE

IC501	A-1
D501	C-1

SW-423 BOARD (SIDE B)

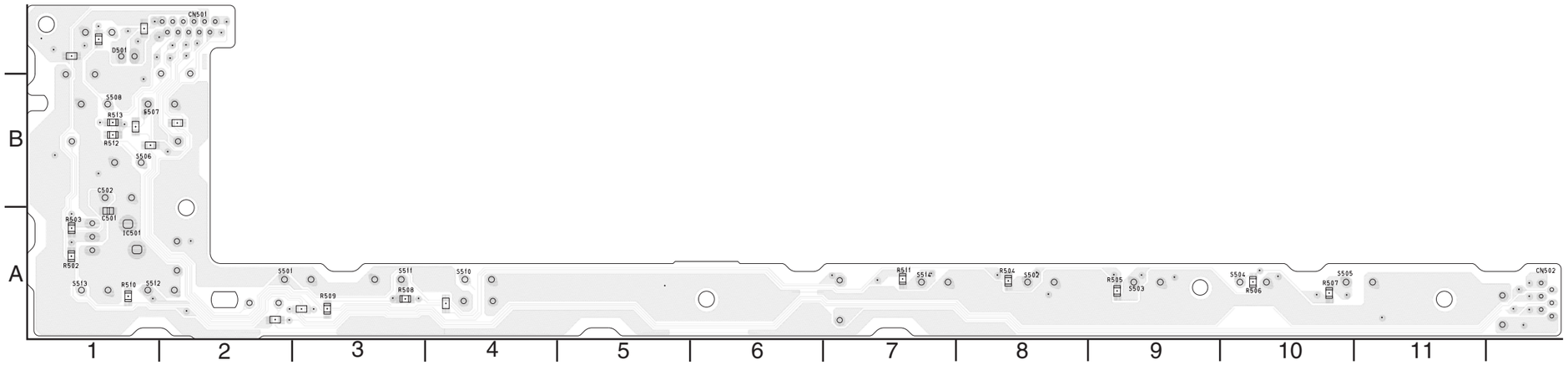

For Schematic Diagram
• Refer to page 4-21 for printed wiring boards of SW-423 board

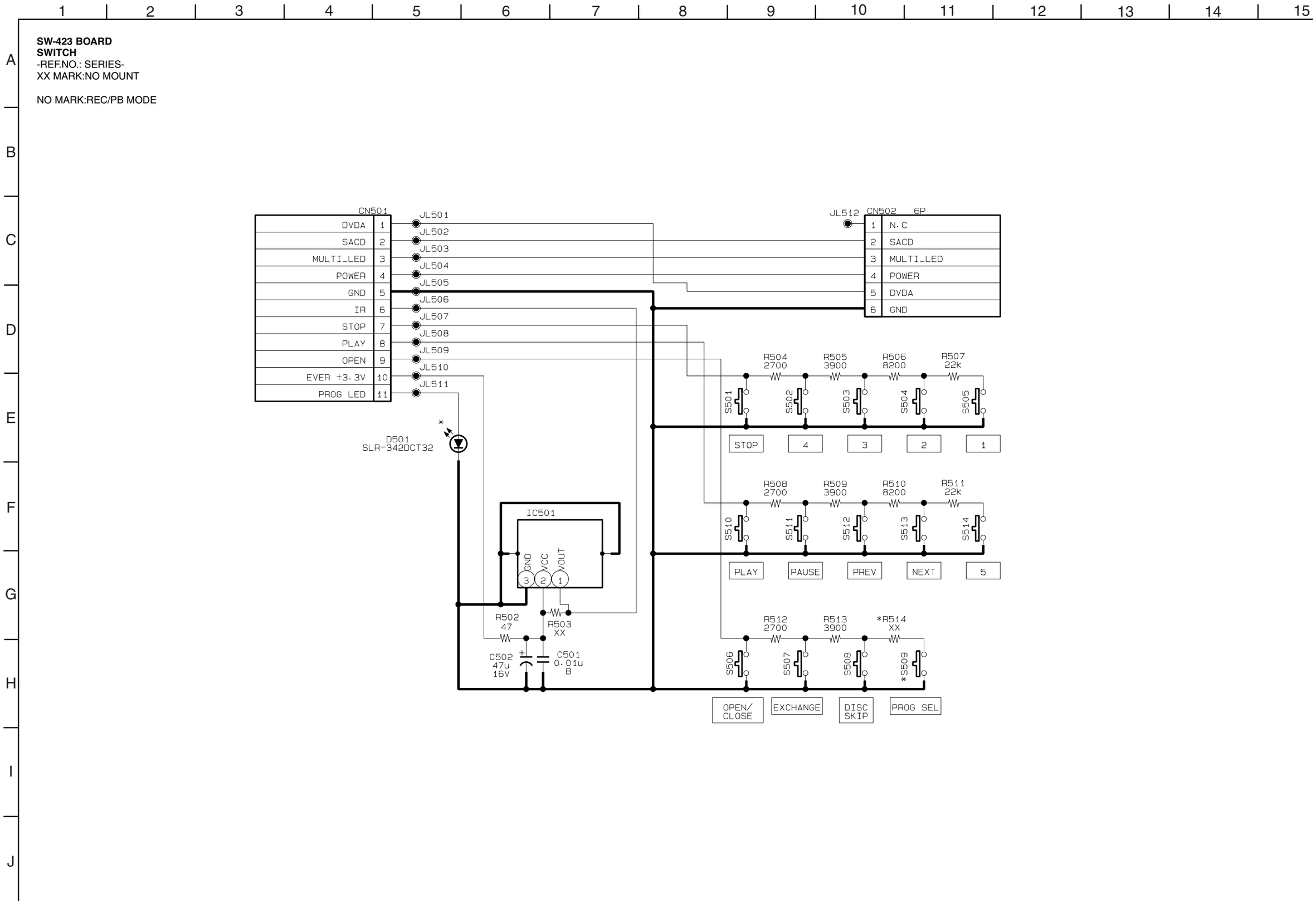

SWITCH
SW-423

FR-218 (FUNCTION SW) PRINTED WIRING BOARD

• : Uses unleaded solder.

FR-218 BOARD (SIDE A)

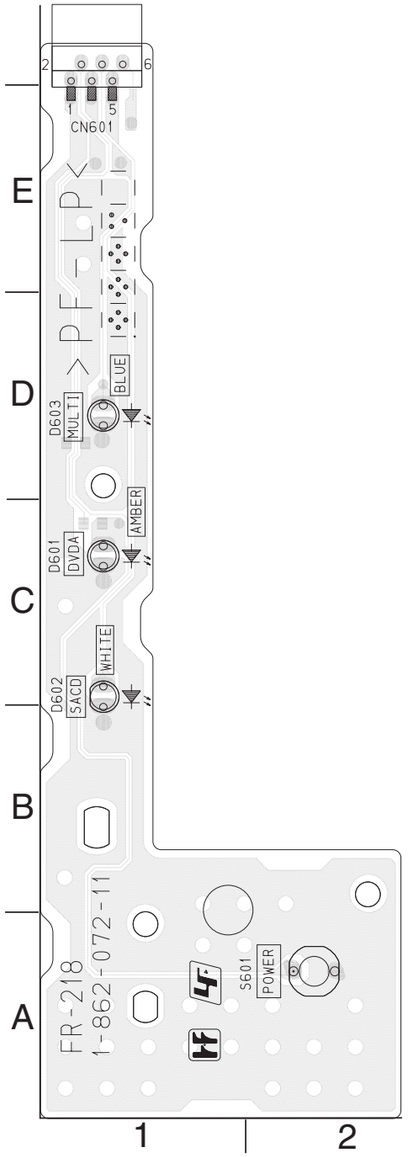

FR-218 BOARD (SIDE B)

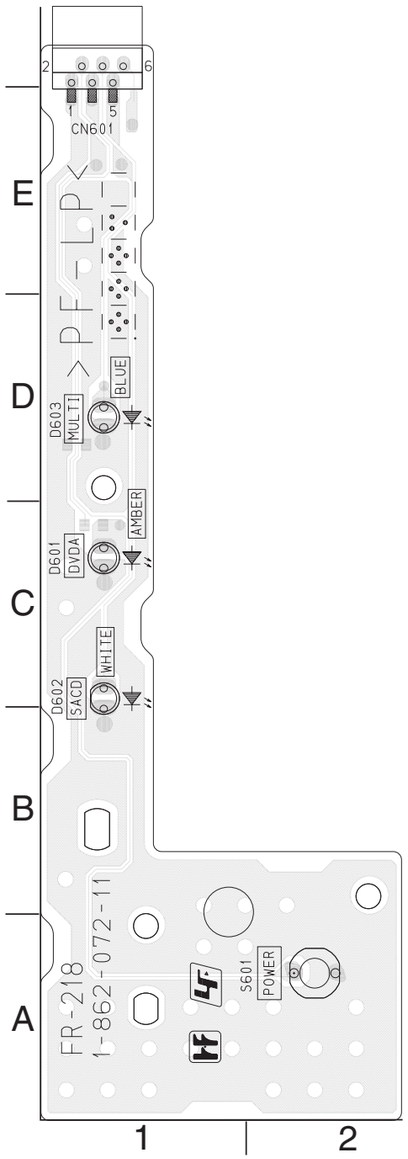

For printed wiring board

There are a few cases that the part printed on this diagram isn't mounted in this model.

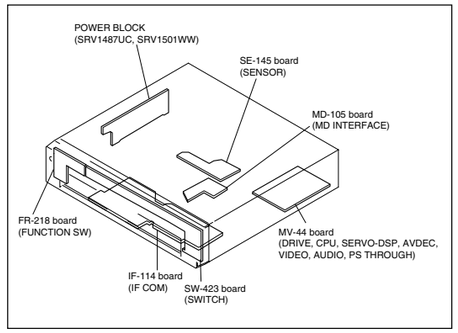

FR-218 BOARD

A SIDE

D601 C-1
D602 C-1
D603 D-1

B SIDE

D601 C-1
D602 C-1
D603 D-1

FUNCTION SW
FR-218

For Schematic Diagram

• Refer to page 4-25 for printed wiring board of FR-218 board.

FR-218 BOARD
FUNCTION SW
-REF.NO.: SERIES-
XX MARK:NO MOUNT

NO MARK:REC/PB MODE

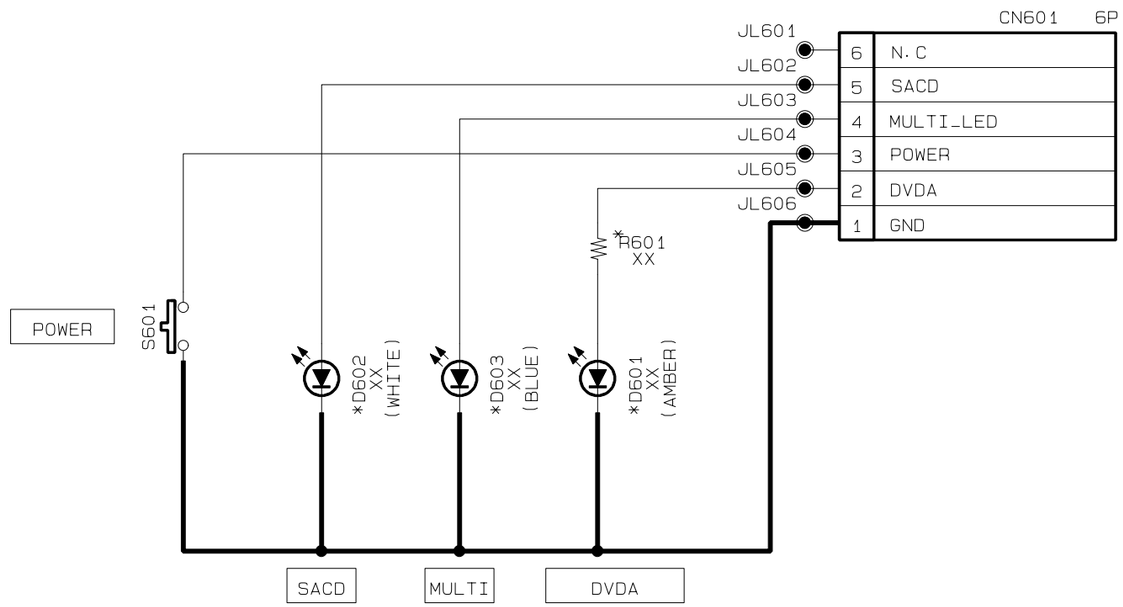

FUNCTION SW
FR-218

SE-145 (SENSOR), MD-105 (MD INTERFACE) PRINTED WIRING BOARDS

SE-145 BOARD (SIDE A)

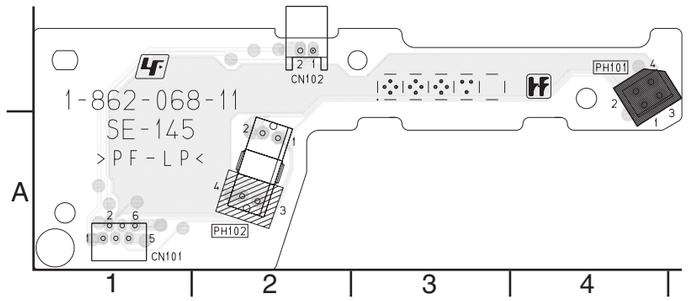

SE-145 BOARD (SIDE B)

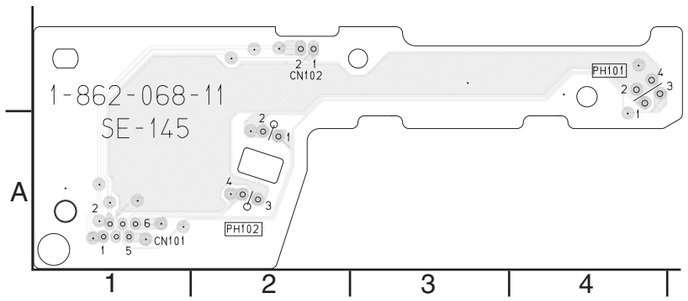

MD-105 BOARD (SIDE A)

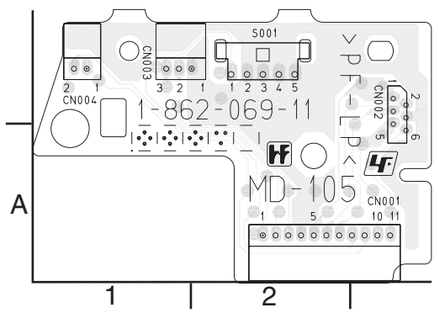

MD-105 BOARD (SIDE B)

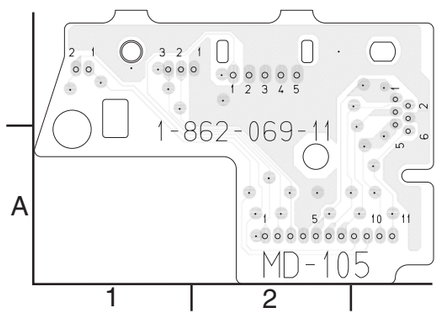

- : Uses unleaded solder.

For printed wiring board

There are a few cases that the part printed on this diagram isn't mounted in this model.

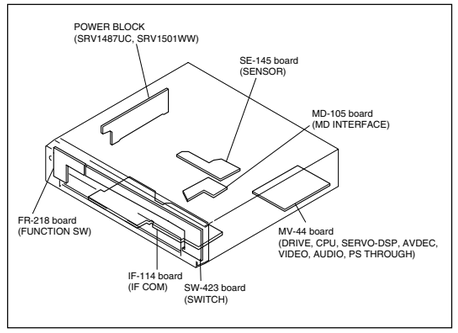

For Schematic Diagram

• Refer to page 4-29 for printed wiring boards of SE-145, MD-105 boards.

SE-145 BOARD
SENSOR
-REF.NO.:1000 SERIES-
XX MARK:NO MOUNT

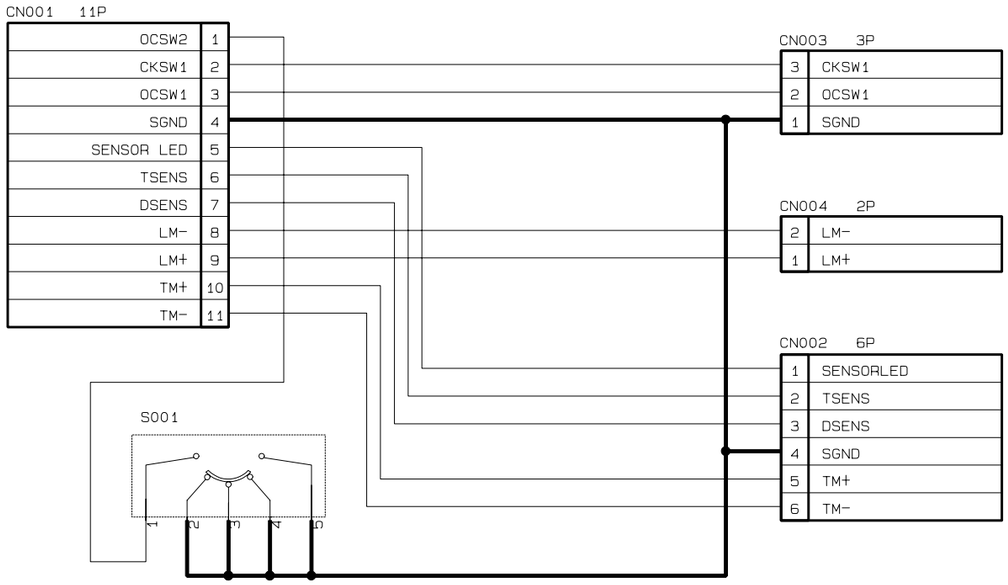

MD-105 BOARD
MD INTERFACE
-REF.NO.:1000 SERIES-
XX MARK:NO MOUNT

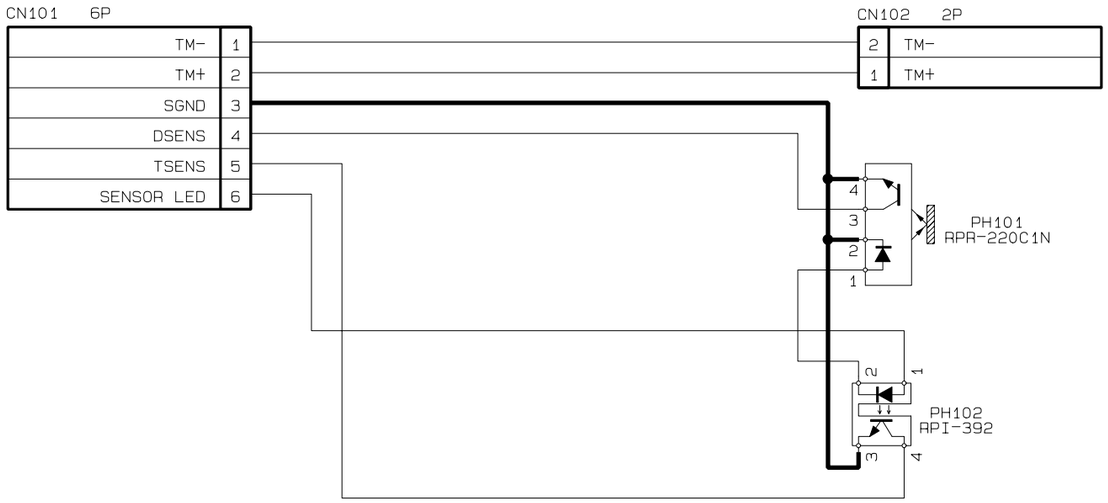

SENSOR / MD INTERFACE
SE-145 / MD-105

POWER BLOCK (SRV1487UC) PRINTED WIRING BOARD

• : Uses unleaded solder.

POWER BOARD (SRV1487UC) (SIDE A)
(US, CND, MX)

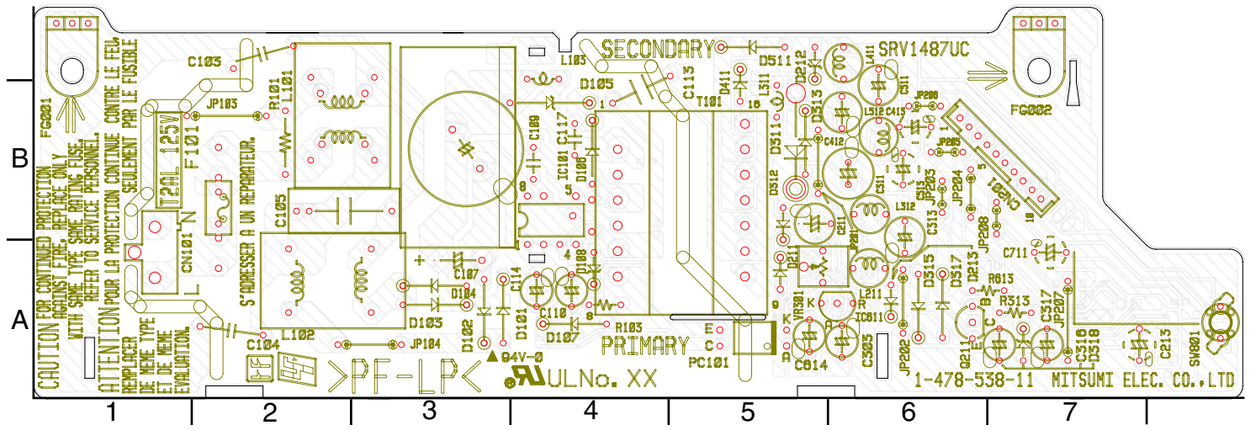

POWER BOARD (SRV1487UC) (SIDE B)
(US, CND, MX)

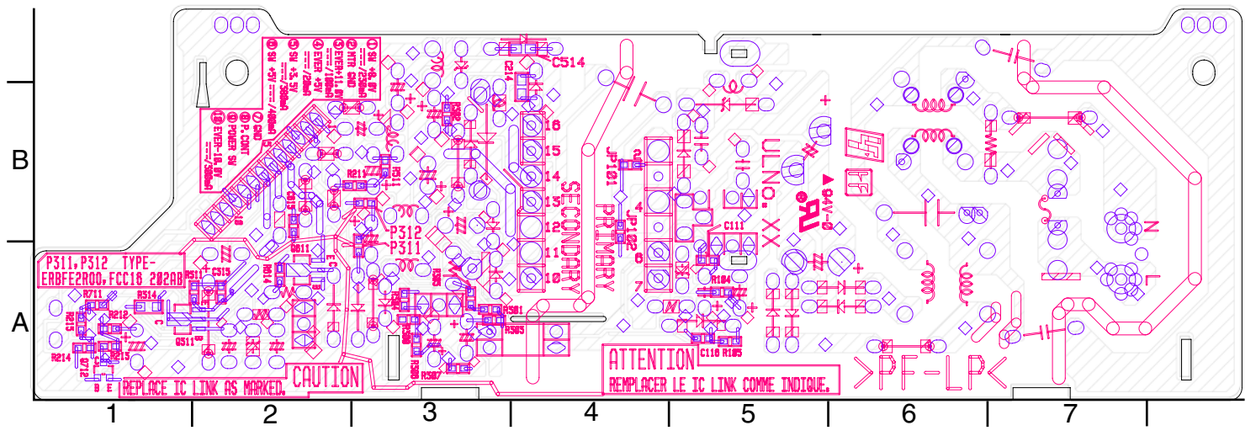

For printed wiring board

There are a few cases that the part printed on this diagram isn't mounted in this model.

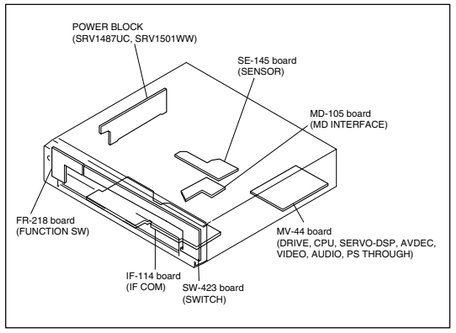

POWER BOARD
(SRV1487UC)

A SIDE

IC101	B-4
IC611	A-6
Q211	A-6
D101	A-4
D102	A-3
D103	A-3
D104	A-3
D105	B-4
D106	B-4
D107	A-4
D108	A-4
D211	A-5
D212	C-5
D213	A-6
D311	B-5
D312	B-5
D313	B-5
D315	A-6
D317	A-6
D318	A-7
D411	B-5
D511	C-5

B SIDE

Q311	A-1
Q611	A-2
Q712	A-1

POWER BOARD
POWER BLOCK (SRV1487UC)

For Schematic Diagram

• Refer to page 4-33 for printed wiring board of Power Board.

POWER BOARD
POWER BLOCK (SRV1487UC) (US, CND, MX)
-REF.NO.:1000 SERIES-
XX MARK:NO MOUNT

NO MARK:PB MODE
MARKED:MOUNT TABLE

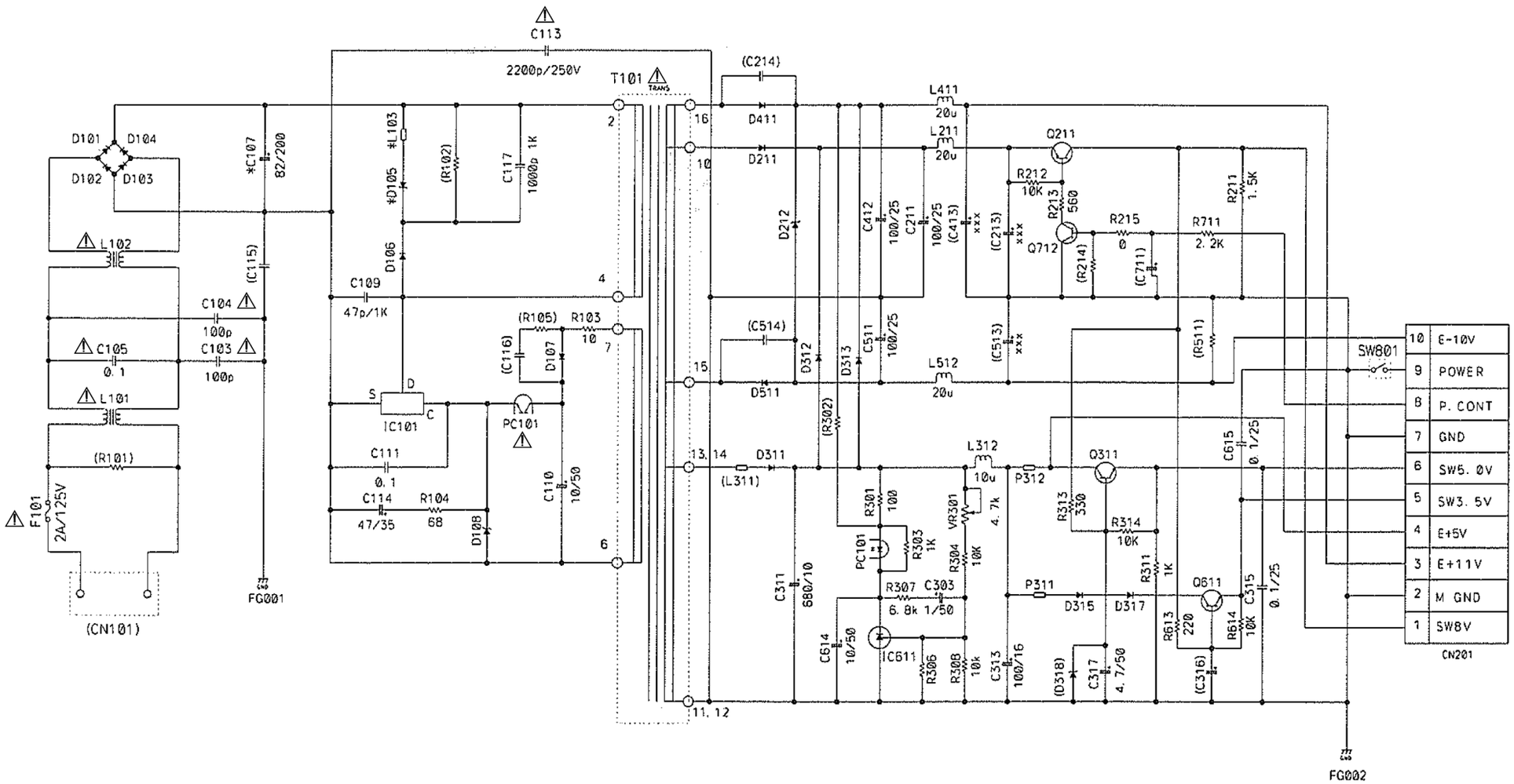

The components identified by mark ⚠ or dotted line with mark ⚠ are critical for safety. Replace only with part number specified.	Les composants identifiés par une marque ⚠ sont critiques pour la sécurité. Ne les remplacer que par une pièce portant le numéro spécifié.

POWER BOARD
POWER BLOCK (SRV1487UC)

POWER BLOCK (SRV1501WW) PRINTED WIRING BOARD

• : Uses unleaded solder.

POWER BOARD (SRV1501WW) (SIDE A)
(E, SP, AUS)

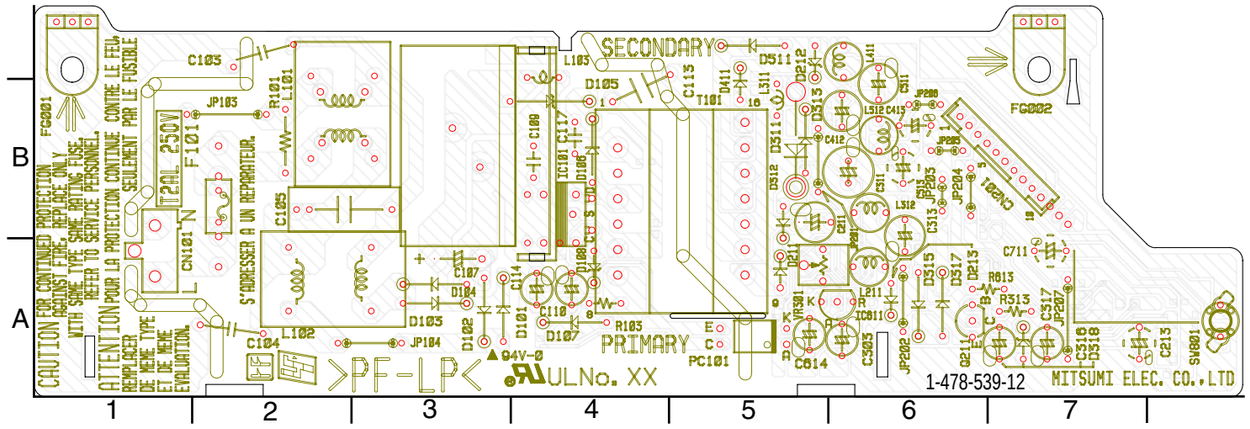

POWER BOARD (SRV1501WW) (SIDE b)
(E, SP, AUS)

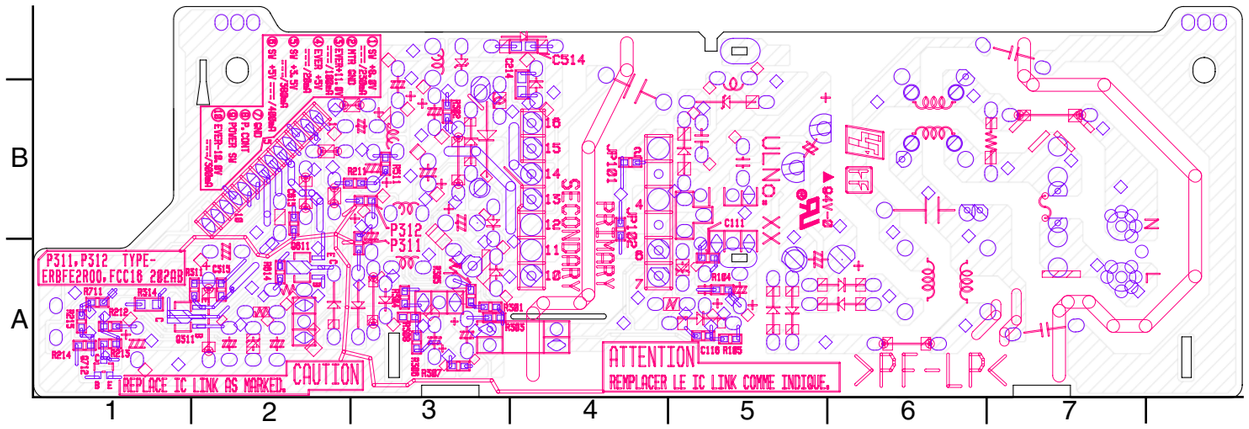

For printed wiring board

There are a few cases that the part printed on this diagram isn't mounted in this model.

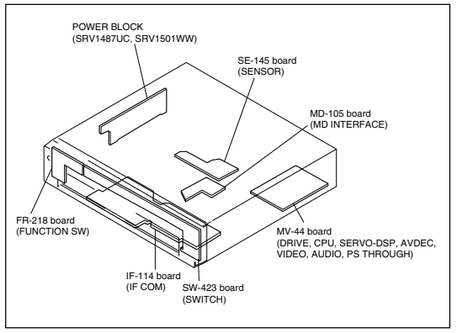

POWER BOARD (SRV1501WW)

A SIDE

IC101	B-4
IC611	A-6
Q211	A-6
D101	A-4
D102	A-3
D103	A-3
D104	A-3
D105	B-4
D106	B-4
D107	A-4
D108	A-4
D211	A-5
D212	C-5
D213	A-6
D311	B-5
D312	B-5
D313	B-5
D315	A-6
D317	A-6
D318	A-7
D411	B-5
D511	C-5

B SIDE

Q311	A-1
Q611	A-2
Q712	A-1

POWER BOARD
POWER BLOCK (SRV1501WW)

For Schematic Diagram

• Refer to page 4-37 for printed wiring board of Power Board.

POWER BOARD
POWER BLOCK (SRV1501WW) (E, SP, AUS)
-REF.NO.:1000 SERIES-
XX MARK:NO MOUNT

NO MARK:PB MODE
MARKED:MOUNT TABLE

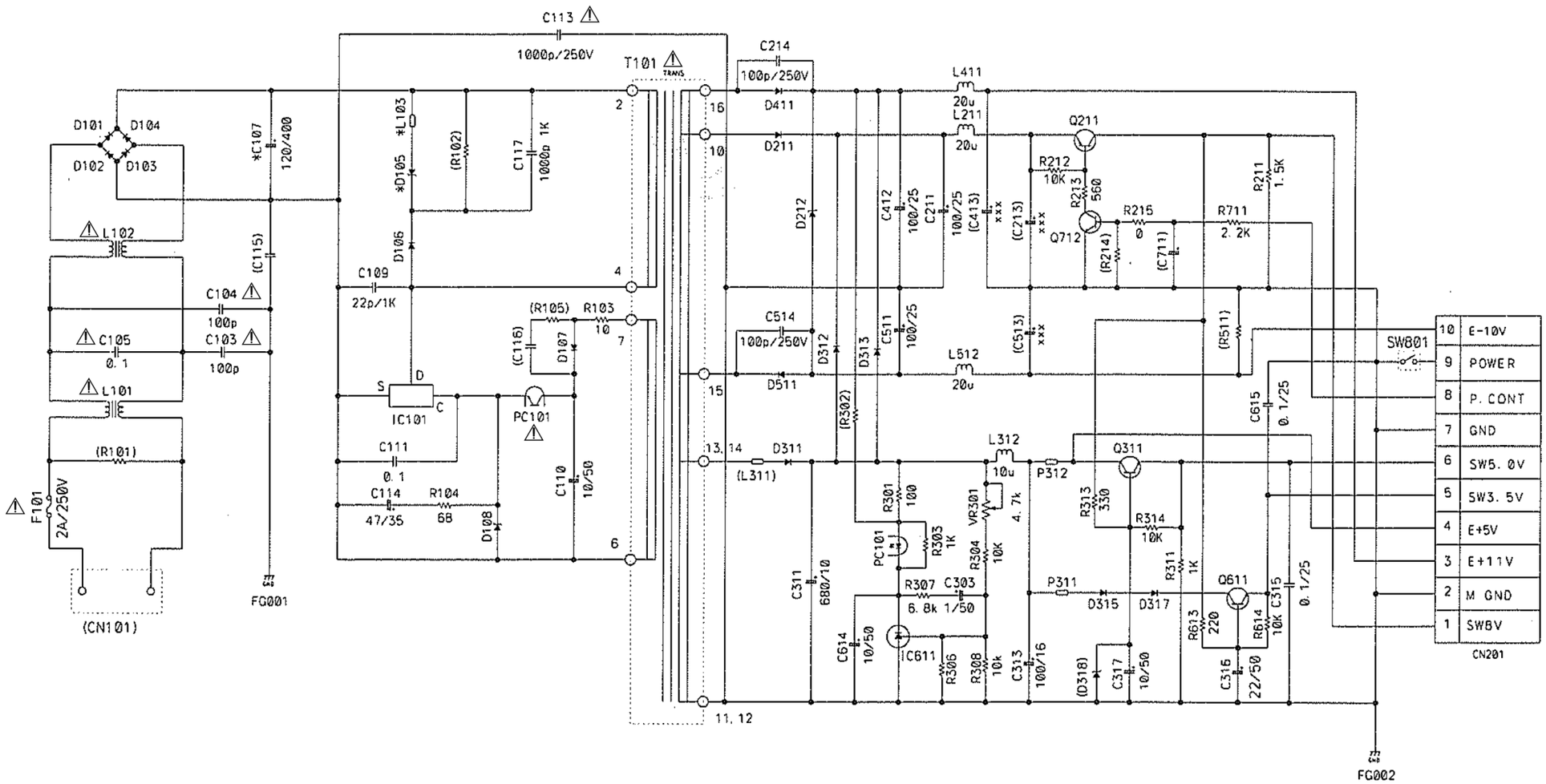

The components identified by mark ⚠ or dotted line with mark ⚠ are critical for safety. Replace only with part number specified.	Les composants identifiés par une marque ⚠ sont critiques pour la sécurité. Ne les remplacer que par une pièce portant le numéro spécifié.

POWER BOARD
POWER BLOCK (SRV1501WW)

SECTION 5
IC PIN FUNCTION DESCRIPTION

5-1. SYSTEM CONTROL PIN FUNCTION (MV-044 BOARD IC201)

Pin No.	Pin name	Type	Function
1	IREF	Analog Input	Current reference input. It generates reference current for data PLL. Connect an external 100K resistor to this pin and PLLVSS.
2	PLLVSS	Ground	Ground pin for data PLL and related analog circuitry
3	LPIOP	Analog Output	Positive output of the low pass filter
4	LPION	Analog Output	Negative output of the low pass filter
5	LPFON	Analog Output	Negative output of loop filter amplifier
6	LPFIP	Analog Input	Positive input of loop filter amplifier
7	LPFIN	Analog Input	Negative input of loop filter amplifier
8	LDFOP	Analog Output	Positive output of loop filter amplifier
9	JITFO	Analog Output	RF jitter meter output
10	JITFN	Analog Input	Negative input of the operation amplifier for RF jigger meter
11	PLLVDD3	Power	3.3V power pin for data PLL and related analog circuitry
12	FOO	Analog Output	Focus servo output. PDM output of focus servo compensator
13	TRO	Analog Output	Tracking servo output. PDM output of tracking servo compensator
14	TROPENPWM	Analog Output	Tray open output, controlled by microcontroller. This is PWM output for TRWMEN27hRW2=1 or is digital output for TRWMEN27hRW2=0
15	PWMOUT1	Analog Output	The 1st general PWM output
16	PWMOUT2	Analog Output	The 2nd general PWM output
17	DVDD2	Power	2.5V power pin for internal fully digital circuitry
18	DMO	Analog Output	Disk motor control output. PWM output
19	FMO	Analog Output	Feed motor control. PWM output
20	DVSS	Ground	Ground pin for internal fully digital circuitry
21	FG	Input	Motor Hall sensor input
22	HIGHA0	Inout 2~16MA, SR PU	Microcontroller address 8
23	HIGHA1	Inout 2~16MA, SR PU	Microcontroller address 9
24	HIGHA2	Inout 2~16MA, SR PU	Microcontroller address 10
25	HIGHA3	Inout 2~16MA, SR PU	Microcontroller address 11
26	HIGHA4	Inout 2~16MA, SR PU	Microcontroller address 12
27	HIGHA5	Inout 2~16MA, SR PU	Microcontroller address 13
28	DVSS	Ground	Ground pin for internal digital circuitry
29	HIGHA6	Inout 2~16MA, SR PU	Microcontroller address 14
30	HIGHA7	Inout 2~16MA, SR PU	Microcontroller address 15
31	AD7	Inout 2~16MA, SR	Microcontroller address/data 7
32	AD6	Inout 2~16MA, SR	Microcontroller address/data 6
33	AD5	Inout 2~16MA, SR	Microcontroller address/data 5

Pin No.	Pin name	Type	Function
34	AD4	Inout 2~16MA, SR	Microcontroller address/data 4
35	DVDD3	Power	3.3V power pin for internal digital circuitry
36	AD3	Inout 2~16MA, SR	Microcontroller address/data 3
37	AD2	Inout 2~16MA, SR	Microcontroller address/data 2
38	AD1	Inout 2~16MA, SR	Microcontroller address/data 1
39	AD0	Inout 2~16MA, SR	Microcontroller address/data 0
40	IOA0	Inout 2~16MA, SR PU	Microcontroller address 0/10
41	IOA1	Inout 2~16MA, SR PU	Microcontroller address 1/10
42	DVDD2	Power	2.5V power pin for internal digital circuitry
43	IOA2	Inout 2~16MA, SR PU	Microcontroller address 2/10
44	IOA3	Inout 2~16MA, SR PU	Microcontroller address 3/10
45	IOA4	Inout 2~16MA, SR PU	Microcontroller address 4/10
46	IOA5	Inout 2~16MA, SR PU	Microcontroller address 5/10
47	IOA6	Inout 2~16MA, SR PU	Microcontroller address 6/10
48	IOA7	Inout 2~16MA, SR PU	Microcontroller address 7/10
49	A16	Output 2~16MA, SR	Flash address 16
50	A17	Output 2~16MA, SR	Flash address 17
51	IOA18	Inout 2~16MA, SR SMT	Flash address 18/10
52	IOA19	Inout 2~16MA, SR SMT	Flash address 19/10
53	IOA20	Inout 2~16MA, SR SMT	Flash address 20/10 OR Videoin Data PortB 0
54	APLLVSS	Ground	Ground pin for audio clock circuitry
55	APLLVDD3	Power	3.3V Power pin for audio clock circuitry
56	ALE	Inout 2~16MA, SR PU, SMT	Microcontroller address latch enable
57	IOOE#	Inout 2~16MA, SR SMT	Flash output enable, active low / 10
58	IOWR#	Inout 2~16MA, SR SMT	Flash write enable, active low / 10

Pin No.	Pin name	Type	Function
59	IOCS#	Inout 2~16MA, SR PU, SMT	Flash chip select, active low / 10
60	DVSS	Ground	Ground pin for internal digital circuitry
61	UP1_2	Inout 4MA, SR PU, SMT	Microcontroller port 1-2
62	UP1_3	Inout 4MA, SR PU, SMT	Microcontroller port 1-3
63	UP1_4	Inout 4MA, SR PU, SMT	Microcontroller port 1-4
64	UP1_5	Inout 4MA, SR PU, SMT	Microcontroller port 1-5
65	UP1_6	Inout 4MA, SR PU, SMT	Microcontroller port 1-6
66	DVDD3	Power	3.3V power pin for internal digital circuitry
67	UP1_7	Inout 4MA, SR PU, SMT	Microcontroller port 1-7
68	UP3_0	Inout 4MA, SR PU, SMT	Microcontroller port 3-0
69	UP3_1	Inout 4MA, SR PU, SMT	Microcontroller port 3-1
70	INT0#	Inout 2~16MA, SR PU, SMT	Microcontroller interrupt 0, active low
71	IR	Input SMT	IR control signal input
72	DVDD2	Power	2.5V power pin for internal digital circuitry
73	UP3_4	Inout	Microcontroller port 3-4
74	UP3_5	Inout	Microcontroller port 3-5
75	UWR#	Inout 2~16MA, SR PU, SMT	Microcontroller write strobe, active low
76	URD#	Inout 2~16MA, SR PU, SMT	Microcontroller read strobe, active low
77	DVSS	Ground	Ground pin for internal digital circuitry
78	RD7	Inout	DRAM data 7
79	RD6	Inout	DRAM data 6
80	RD5	Inout	DRAM data 5
81	RD4	Inout	DRAM data 4
82	DVDD2	Power	2.5V power pin for internal digital circuitry
83	RD3	Inout	DRAM data 3
84	RD2	Inout	DRAM data 2
85	RD1	Inout	DRAM data 1
86	RD0	Inout	DRAM data 0
87	RWE#	Output 2~16MA, SR	DRAM Write enable, active low
88	CAS#	Output 2~16MA, SR	DRAM columnaddress strobe, active low
89	RAS#	Output 2~16MA, SR	DRAM row address strobe, active low

Pin No.	Pin name	Type	Function
90	RCS#	Output 2~16MA, SR	DRAM chip select, active low
91	BA0	Output 2~16MA, SR	DRAM bank address 0
92	DVSS	Ground	Ground pin for internal digital circuitry
93	RD15	Inout 2~16MA, SR PU/PD, SMT	DRAM data 15
94	RD14	Inout 2~16MA, SR PU/PD, SMT	DRAM data 14
95	RD13	Inout 2~16MA, SR PU/PD, SMT	DRAM data 13
96	RD12	Inout 2~16MA, SR PU/PD, SMT	DRAM data12
97	DVDD3	Power	3.3V power pin for internal digital circuitry
98	RD11	Inout 2~16MA, SR PU/PD, SMT	DRAM data 11
99	RD10	Inout 2~16MA, SR PU/PD, SMT	DRAM data 10
100	RD9	Inout 2~16MA, SR PU/PD, SMT	DRAM data 9
101	RD8	Inout 2~16MA, SR PU/PD, SMT	DRAM data 8
102	DVSS	Ground	Ground pin for internal digital circuitry
103	CLK	Output 2~16MA, SR	DRAM clock
104	CLE	Output 2~16MA, SR	DRAM clock enable
105	RA11	Output 2~16MA, SR	DRAM address bit 11 or audio serial data 3 (channel 7/8)
106	RA9	Output 2~16MA, SR	DRAM address 9
107	RA8	Output 2~16MA, SR	DRAM address 8
108	DMVDD3	Power	3.3V Power pin for DRAM clock circuitry
109	DMVSS	Ground	Ground pin for DRAM clock circuitry
110	RA7	Output 2~16MA, SR	DRAM address 7
111	DVDD3	Power	3.3V power pin for internal digital circuitry
112	RA6	Output 2~16MA, SR	DRAM address 6
113	RA5	Output 2~16MA, SR	DRAM address 5
114	RA4	Output 2~16MA, SR	DRAM address 4
115	DVSS	Ground	Ground pin for internal digital circuitry
116	DQM1	Output 2~16MA, SR	Mask for DRAM input/output byte 1
117	DQM0	Output 2~16MA, SR	Mask for DRAM input/output byte 0
118	BA1	Output 2~16MA, SR	DRAM bank address 0
119	RA10	Output 2~16MA, SR	DRAM address 10

Pin No.	Pin name	Type	Function
120	DVDD2	Power	2.5V power pin for internal digital circuitry
121	RA0	Output 2~16MA, SR	DRAM address 0
122	RA1	Output 2~16MA, SR	DRAM address 1
123	RA2	Output 2~16MA, SR	DRAm address 2
124	RA3	Output 2~16MA, SR	DRAM address 3
125	DVSS	Ground	Ground pin for internal digital circuitry
126	RD31	Inout 2~16MA, SR PU/PD, SMT	DRAM data 31
127	RD30	Inout 2~16MA, SR PU/PD, SMT'	DRAM data 30
128	RD29	Inout 2~16MA, SR PU/PD, SMT	DRAM data 29
129	RD28	Inout 2~16MA, SR PU/PD, SMT	DRAM data 28
130	DVDD3	Power	3.3V power pin for internal digital circuitry
131	RD27	Inout 2~16MA, SR PU/PD, SMT	DRAM data 27
132	RD26	Inout 2~16MA, SR PU/PD, SMT	DRAM data 26
133	RD25	Inout 2~16MA, SR PU/PD, SMT	DRAM data 25
134	RD24	Inout 2~16MA, SR PU/PD, SMT	DRAM data 24
135	DVSS	Ground	Ground pin for internal digital circuitry
136	DQM3	Output 2~16MA, SR	Mask for DRAM input/output byte 3
137	DQM2	Output 2~16MA, SR	Mask for DRAM input/output byte 2
138	RD23	Inout 2~16MA, SR PU/PD, SMT	DRAM data 23 / Videoin Data PortA 7
139	RD22	Inout 2~16MA, SR PU/PD, SMT	DRAM data 22 / Videoin Data PortA 6
140	DVDD2	Power	2.5V power pin for internal digital circuitry
141	RD21	Inout 2~16MA, SR PU/PD, SMT	DRAM data 21 / Videoin Data PortA 5
142	RD20	Inout 2~16MA, SR PU/PD, SMT	DRAM data 20 / Videoin Data PortA 4
143	RD19	Inout 2~16MA, SR PU/PD, SMT	DRAM data 19 / Videoin Data PortA 3
144	RD18	Inout 2~16MA, SR PU/PD, SMT	DRAM data 18 / Videoin Data PortA 2
145	DVSS	Ground	Ground pin for internal digital circuitry

Pin No.	Pin name	Type	Function
146	RD17	Inout 2~16MA, SR PU/PD, SMT	DRAM data 17 / Videoin Data PortA 1
147	RD16	Inout 2~16MA, SR PU/PD, SMT	DRAM data 16 / Videoin Data PortA 0
148	ABCK	Output 4MA	Audio bit clock
149	ALRCK	Inout 4MA, PD, SMT	(1) Audio left/right channel clock (2) Trap value in power-on reset : 1 : use external 373 0 : use internal 373
150	DVDD3	Power	3.3V power pin for internal digital circuitry
151	ACLK	Inout 4MA	Audio DAC master clock (384/256 audio sample frequency)
152	MC_DATA	Input	Microphone serial input
153	SPDIF	Output 2~16MA, SR : ON/OFF	SPDIF output
154	ASDATA0	Inout 4MA PD SMT	(1) Audio serial data 0 (left/right channel) (2) Trap value in power-on reset : 1 : manufactory test mode 0 : normal operation
155	ASDATA1	Inout 4MA PD SMT	(1) Audio serial data 1 (surround left/surround right channel) (2) Trap value in power-on reset : 1 : manufactory test mode 0 : normal operation
156	ASDATA2	Inout 4MA PD SMT	(1) Audio serial data 2 (center/left channel) (2) Trap value in power-on reset : 1 : manufactory test mode 0 : normal operation
157	ASDATA3	Inout 4MA PD SMT	(1) Audio serial data 3 (surround left/surround right channel) (2) Trap value in power-on reset : 1 : manufactory test mode 0 : normal operation OR Videoin Data PortB 1
158	ASDATA4	Inout 4MA PD SMT	(1) Audio serial data 4 (center/left channel) (2) Trap value in power-on reset : 1 : manufactory test mode 0 : normal operation
159	DACVDDC	Power	3.3V power pin for VIDEO DAC circuitry
160	VREF	Analog input	Bandgap reference voltage
161	FS	Analog output	Full scale adjustment
162	YUV0/CIN	Output 4MA, SR	Video data output bit 0 / Compensation capacitor
163	DACVSSC	Ground	Ground pin for VIDEO DAC circuitry
164	YUV1/C	Output 4MA, SR	Video data output bit 1 / Analog chroma output
165	DACVDDB	Power	3.3V power pin for VIDEO DAC circuitry
166	YUV2/Y	Output 4MA, SR	Video data output bit 2 / Analog Y output
167	DACVSSB	Ground	Ground pin for VIDEO DAC circuitry
168	YUV3/CVBS	Output 4MA, SR	Video data output bit 3 / Analog composite output
169	DACVDDA	Power	3.3V power pin for VIDEO DAC circuitry
170	YUV4/G	Output 4MA, SR	Video data output bit 4 / Green or Y
171	DACVSSA	Ground	Ground pin for VIDEO DAC circuitry
172	YUV5/B	Output 4MA, SR	Video data output bit 5 / Blue or CB
173	YUV6/R	Output 4MA, SR	Video data output bit 6 / Red or CR
174	ICE	Input PD, SMT	Microcontroller ICE mode enable
175	BLAN#	Inout 4MA, SR SMT	Video blank area, active low / Videoin Field_601

Pin No.	Pin name	Type	Function
176	VSYN	Inout 4MA, SR SMT	Vertical sync / Videoin Vsync_601
177	YUV7	Inout 4MA, SR SMT	Video data output bit 7 / Videoin Data PortB 3
178	DVSS	Ground	Ground pin for internal digital circuitry
179	HSYN	Inout 4MA, SR SMT	Horizontal sync / Videoin Hsync_601
180	SPMCLK	Input	Audio DAC master clock of SPDIF input / Videoin Data PortB 4
181	SPDATA	Input	Audio data of SPDIF input / Videoin Data PortB 5
182	DVDD2	Power	2.5V power pin for internal digital circuitry
183	SPLRCK	Input	Audio left/right channel clock of SPDIF input / Videoin Data PortB 6
184	SPBCK	Input	Audio bit clock of SPDIF input/ Videoin Data PortB 7
185	DVDD3	Power	3.3V power pin for internal digital circuitry
186	XTALO	Output	Crystal output
187	XTALI	Input	Crystal input
188	PRST	Input PD, SMT	Power on reset input, active high
189	DVSS	Ground	Ground pin for internal digital circuitry
190	VFO13	Output	The 1st, 3rd header VFO pulse output
191	IDGATE	Output	Header detect signal output
192	DVDD3	Power	3.3V power pin for internal digital circuitry
193	UDGATE	Output	DVD-RAM recording data gate signal output
194	WOBSI	Input	Wobble signal input
195	SDATA	Output	RF serial data output
196	SDEN	Output	RF serial data latch enable
197	SLCK	Output	RF serial clock output
198	BDO	Input	Flag of defect data input status
199	ADCVSS	Ground	Ground pin for ADC circuitry
200	ADIN	Analog Input	General A/D input
201	RFSUBI	Analog Input	RF subtraction signal input terminal
202	TEZISLV	Analog Input	Tracking error zero crossing low pass input
203	TEI	Analog Input	Tracking error input
204	CSO	Analog Input	Central servo input
205	FEI	Analog Input	Focus error input
206	RFLEVEL	Analog Input	Sub beam add input or RFRP low pass input
207	RFRP_DC	A Input	RF ripple detect input
208	RFRP_AC	Analog Input	RF ripple detect input (through AC coupling)
209	HRFZC	Analog Input	High frequency RF ripple zero crossing
210	PWMVREF	A Input	A reference voltage input for PWM circuitry. A typical value of 4.0 v
211	PWM2VREF	A Input	A reference voltage input for PWM circuitry. A typical value of 2.0 v
212	ADCVDD3	Power	3.3V power pin for ADC circuitry
213	RFDTSLVP	Analog Output	Positive RF data slicer level output
214	RFDTSLVN	Analog Output	Negative RF data slicer level output
215	RFIN	Analog Input	Negative input of RF differential signal
216	RFIP	Analog Input	Positive input of RF differential signal

MEMO

SECTION 6
TEST MODE

6-1. GENERAL DESCRIPTION

The Mirror Time and IOP measurement allows you to make diagnosis and adjustment simply by using the remote commander and monitor TV. The instructions, diagnosis results, etc. are given on the on screen display (OSD).

The Mirror Time and IOP measurement is required is such events where servicing a DVD-Player includes changing the Base Unit (BU). For each new BU to be used with a certain MV-044 board, Mirror Time and IOP measurement need to be carried out.

6-2. STARTING TEST MODE

Press the [TOP MENU], [CLEAR], [POWER] keys on the remote commander in this order with the DVD player in standby mode. The Test Mode starts, then the menu shown below will be displayed on the TV screen.

```
        Remocon Diagnosis Menu

0. External Chip Check
1. Servo Parameter Check
2. Drive Manual Operation
3. Emergency History
4. Version Information
5. Video Level Adjustment

Model Name  : DPX-xxxx_xx
IF-con      : Ver. x.xxx (xxxx)
```

The menu above is the Remocon Diagnosis Menu screen which consists of six main function. At the bottom of the menu screen, the model name and IF-con version. To enter Mirror Time Adjustment menu, press button [2] on the remote commander to enter Drive Manual Operation menu. To exit from the Test Mode, press the power button on the remote commander.

6-3. DRIVE MANUAL OPERATION

The Drive Manual Operation menu consists of five main function. By pressing [2] on the remote commander in the Remocon Diagnosis Menu, the screen will appear as below.

```
        Drive Manual Operation

1. Servo Control
2. Track/Layer Jump
3. Manual Adjustment
4. Mecha Test Mode
5. Mirr Time Adjust
0. Return to Top Menu
```

6-4. MIRROR TIME ADJUSTMENT

To enter Mirror Time Adjustment, press [5] on the remote commander. The screen will appear as below.

```
        Mirr time Adjust Menu

1. CD MIRR time Check:
2. DVD MIRR time Check:
3. Threshold:
4. Save to EEPROM
5. Default set MIRR time

[Open] Tray open [Close] Tray close
[0] Return to previous menu
```

There are five main commands in the Mirr time Adjust menu as shown in the figure above. The functions of each command are described in the following page.

1. CD Mirr time Check
This command checks the Mirror time value for CD disc.

2. DVD Mirr time Check
This command checks the Mirror time value for DVD disc.

3. Threshold
This command displays the threshold value between CD and DVD mirror time.

4. Save to EEPROM
This command saves an adjusted mirror time value to the EEPROM.

5. Default set MIRR time
This command will set CD and DVD mirror time to firmware default value.

[Open] / [Close]
Pressing the Open / Close button controls the tray for disc change during mirror time adjustment.

[0] Return to previous menu
Press [0] button to return to previous menu.

6-4-1. EXECUTING MIRROR TIME ADJUSTMENT

In order to execute mirror time adjustment, the following standard procedures must be followed.

(1) In standby mode, press [TOP MENU], [CLEAR], [POWER] to enter Remocon Diagnosis Mode.

(2) Select “2. Drive Manual Operation”.

```
        Remocon Diagnosis Menu

0. External Chip Check
1. Servo Parameter Check
2. Drive Manual Operation
3. Emergency History Check
4. Version information
5. Video Level Adjustment

Model       : DPX-xxxx_xx
IF-con      : Ver. x.xxx (xxxx)
Syscon      : Ver. x.xxx
```

(3) Select “5. MIRR time Adjust”.

```
Drive Manual Operation

1. Servo Control
2. Track/Layer Jump
3. Manual Adjustment
4. Tray Aging Mode
5. MIRR time Adjust
0. Return to Top Menu
```

(4) Select “5. Default set MIRR time”.

```
MIRR time adjustment Menu

1. CD MIRR time Check:
2. DVD MIRR time Check:
3. Threshold:
4. Save to EEPROM:
5. Default set MIRR time:

[Open] Tray open [Close] tray close
[0] Return to previous menu
```

(5) Select “3. Threshold”.

(6) Confirm the number. If it is 75, go to next step. If it is any other value, return to step 4.

```
MIRR time adjustment Menu

1. CD MIRR time Check:
2. DVD MIRR time Check:
3. Threshold:(75) ←
4. Save to EEPROM:
5. Default set MIRR time:

[Open] Tray open [Close] tray close
[0] Return to previous menu
```

(7) Push “Open/Close” key to eject tray.

(8) Insert Test Disc HLX-504 into tray.

(9) Push “Open/Close” key to close tray.

(10) Push “2. DVD MIRR time Check”.

(11) Wait for HEX number to display.

(12) Confirm the number, if XX is 28 ~ 70, proceed with next step. If no, return to 8.

```
MIRR time adjustment Menu

1. CD MIRR time Check:
2. DVD MIRR time Check:  xx (xx)
3. Thereshold:
4. Save to EEPROM:
5. Default set MIRR time:

[Open] tray open [close] tray close
[0] Return to previous menu
```

(13) Push “4. Save to EEPROM”.

(14) Confirm the same values are displayed. If it is not same, return to step 7.

```
MIRR time adjustment Menu

1. CD MIRR time Check:
2. DVD MIRR time Check: (XX XX)
3. Threshold:
4. Save to EEPROM:
5. Default set MIRR time:

[Open] Tray open [close] tray close
[0] Return to previous menu
```

(15) Push “Open/Close” key to eject tray.

(16) Take out HLX-504 and insert Test Disc YEDS-18 into tray.

(17) Push “Open/Close” key to close tray.

(18) Push “1. CD MIRR time check”.

(19) Wait for HEX number to display.

(20) Confirm the number, if YY is 5A ~ E8, proceed with next step. If no, return to 15.

```
MIRR time adjustment Menu

1. CD MIRR time Check:  yy (YY)
2. DVD MIRR time Check:  XX  XX
3. Threshold:
4. Save to EEPROM:
5. Default set MIRR time:

[Open] Tray open [close] tray close
[0] Return to previous menu
```

(21) Push “4. Save to EEPROM”.

(22) Confirm the same values are displayed. If it is not the same, return to step 15.

```
MIRR time adjustment Menu

1. CD MIRR time check: (YY  YY)
2. DVD MIRR time check:  XX  XX
3. Threshold:
4. Save to EEPROM:
5. Default set MIRR time:

[Open] Tray open [close] tray close
[0] Return to previous menu
```

(23) Push “Open/Close” key to eject tray.

(24) Remove Test Disc YEDS-18 from tray.

(25) Push “Open/Close” key to close tray.

(26) Press “0” to return to the Drive Manual Operation menu.

(27) Press “0” to return to the Remocon Diagnosis Menu.

(28) Press power button to switch OFF set.

6-5. EXECUTING IOP MEASUREMENT

In order to execute mirror time adjustment, the following standard procedures must be followed.

(1) In standby mode, press [TOP MENU], [CLEAR], [POWER] to enter Remocon Diagnosis Mode.

```
        Remocon Diagnosis Menu

0. External Chip Check
1. Servo Parameter Check
2. Drive Manual Operation
3. Emergency History Check
4. Version information
5. Video Level Adjustment

Model        : DPX-1790_UC2
IF-con  Ver  : 1.000 (5B84)
Syscon  Ver  : 1.81
```

(2) Select "2. Drive Manual Operation" by pressing the [2] key on the remote commander. The screen will appear as below.

```
        Drive Manual Operation

1. Servo Control
2. Track/Layer Jump
3. Manual Adjustment
4. Tray Aging Mode
5. MIRR time adjust
0. Return to top Menu
```

(3) Select "3. Manual Adjustment" by pressing the [3] key on the remote commander. The screen will appear as below.

```
              Manual Adjust

1. Track Balance Adjust:
2. Track Gain Adjust:
3. Focus Balance Adjust:
4. Focus Gain Adjust:
5. Eg boost Adjust:
6. Iop:
7. TRV. Level:
8. S curve(FE) Level:
9. RFL(PI) Level:
0. MIRR Time:

↓ ↑  Change Value
[RETURN] Return to previous menu
```

(4) Select Iop by pressing [6] key on the remote commander.

(5) Wait until a hexadecimal number appear.

```
              Manual Adjust

1. Track Balance Adjust:
2. Track Gain Adjust:
3. Focus Balance Adjust:
4. Focus Gain Adjust:
5. Eq Boost Adjust:
6. Iop: ED 9E:
7. TRV. Level:
8. S curve(FE) Level:
9. RFL(PI) Level:
0. MIRR Time:

Change Value
[0] Return to previous menu
```

(6) Convert each data from hexadecimal to decimal using conversion table.

(7) Substract between these two values.

(8) If the remainder is smaller than 93 (decimal), then it is OK. However if the value is higher than 93, then the BU is defective and need to be change.

(9) Press [RETURN] to return back to previous menu.

(10) Press 0 to return to Top Menu and power OFF the DVD Player.

6-6. IF CON SELF DIAGNOSTIC FUNCTION

1. IF-112 BOARD (IF CON) TEXT MODE

The IF-112 board (IF CON) test mode is the IF CON self-diagnosis mode. THe IF CON can diagnose the functions of the IF-112 board that the IF CON controls. Normally, the IF CON makes a serial communication with the SYSTEM CONTROL and operates following the commands from the SYSTEM CONTROL, but in the Test mode, the IF CON operates independently from the SYSTEM CONTROL.

In the test mode, the following functions can be checked.

1. Button function
2. Remote commander receiving function
3. SYSTEM CONTROL-IF CON serial communication
4. Click shuttle function
5. Fluorescent display tube lighting check
   - Grid check
   - Anode check

In the test mode, the main unit operates same as usual, except voltage monitoring, communication, display of fluorescent display tube.

1. The routine that monitors +3.3V (PCONT) of MV-044 board is not provided.
2. The monitoring timer for serial communication with the SYSTEM CONTROL is not provided. The main unit is not placed in the Standby mode, even if the communication with SYSTEM CONTROL is normal.
3. Display of fluorescent display tube.
   (Normally, display is mode following the commands from SYSTEM CONTROL).

2. OPERATION OF SELF CHECK MODE

The Self Check mode is the function to conduct the basic test to the FL display and DVD panel section.

2-1. Self Check Mode Transition Processing

At the AC Power ON after reset of IF CON is released, while pressing with the MV-044 board are not connected to the IF-112 board, or while pressing the [■] key on the main unit with the IF CON in STANDBY mode, enter [RETURN] → [DISPLAY] (or [SETUP]) on the remote commander, and the main unit transits to the Self Check Mode.

2-2. Operation of Auto Self Check

When the Self Check mode becomes active at the AC Power ON or by key input, the test display of the following steps (1) to (4) is repeated.

(1) FLD and LED all ON (for 5 seconds)

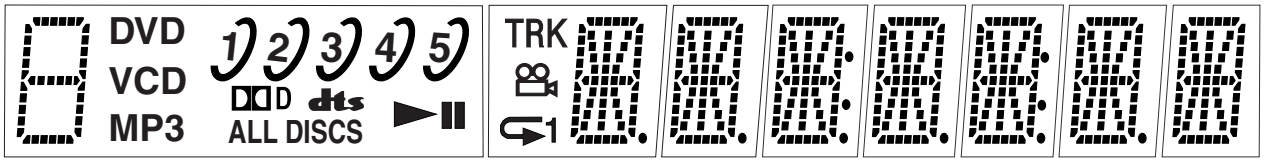

(2) MODEL display (for 2 seconds)

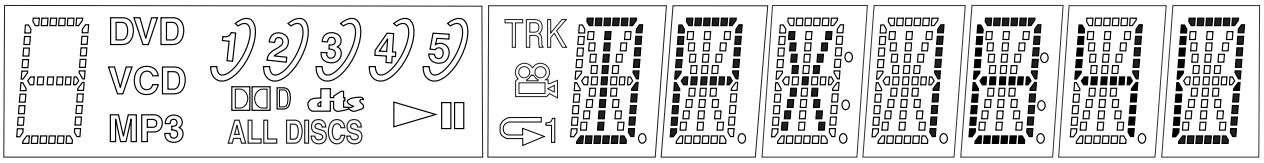

(3) Version display (for 2 seconds)

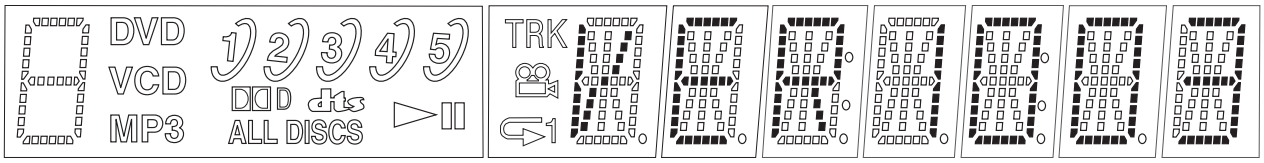

(4) ROM creation date display (for 2 seconds)

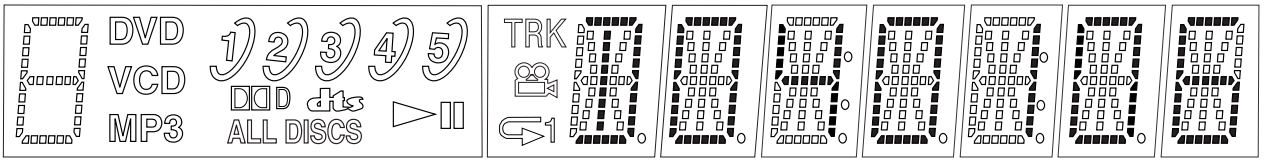

2-3. Each Self Check Function

Each Self Check function tests the FLD display, and key input.

Input Voltage [V]	IC404: Pin No. (Signal)			
	PIN ㉞ (AD1)	PIN ㉟ (AD2)	PIN ㊱ (AD3)	PIN ㊲ (AD4)
0 - 0.20	PLAY	OPEN/CLOSE	STOP	POWER
0.60 - 0.82	PAUSE	EXCHANGE	DISC 4	-
1.16 - 1.47	PREVIOUS	DISC SKIP	DISC 3	-
1.80 - 2.12	NEXT	-	DISC 2	-
2.48 - 2.70	DISC 5	-	DISC 1	-

Vref = 3.3V

2-3-1. FLD All ON

2-3-1-1. Transition Keys in Self Check Mode

- ⏏ key and ■ key on the main unit
- ← key on the remote commander

2-3-1-2. Operation and display

In this mode, all segments of FLD turn ON.

- **Example of FLD all ON**

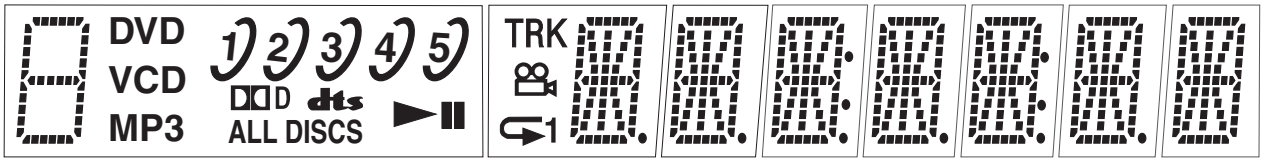

2-3-2. Main Unit Key Code Display

2-3-2-1. Transition Keys in Self Check Mode

- Keys on the main unit except keys transited in Self Check Mode

2-3-2-2. Operation and Display

When a key on the main unit is pressed in the Self Check mode, key code is displayed on the FLD.

- **Key code display (at input of ▷ key, key code: 0Ah)**

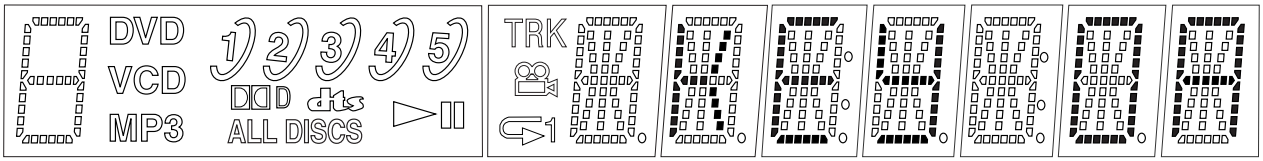

- **At input of faulty voltage**

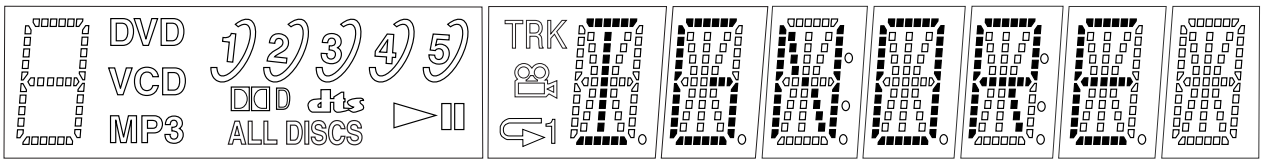

2-3-3. Remote Commander Key Code Display

2-3-3-1. Transition Keys in Self Check Mode

- Remote commander keys except keys transited in Self Check Mode

2-3-3-2. Operation and Display

When a key on the remote commander is pressed in the Self Check Mode, the code is displayed on th FLD.

- **Remote commander key code display (at input of [II] key, key code:39h)**

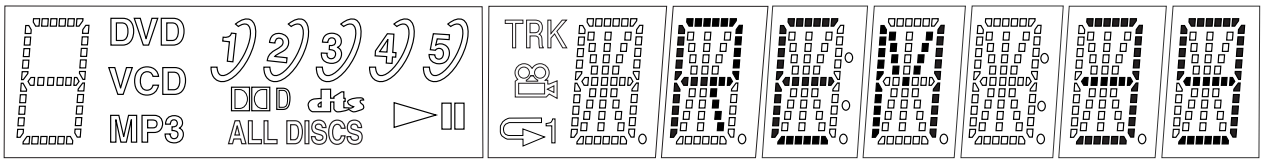

2-3-4. FLD Anode Test Display and SHUTTLE Click Operation Test

2-3-4-1. Transition Keys in Self Check Mode

- [→] key on the remote commander
- SHUTTLE on the remote commander during Anode Test display (This unit does not provide JOG/SHUTTLE, and therefore use another DVD remote commander having the JOG/SHUTTLE)

2-3-4-2. Operation and Display

The Self Check Mode transits to this mode when [→] key is entered. This tests whether each segment turns on individually. Only the first segment of each grid of FLD turns on, and each time the SHUTTLE is entered, the segment of each grid switched in order. When SHUTTLE input is clockwise, the segment switches in 1 - 2 -3 direction, or counterclockwise it switches in 3 - 2- 1 direction.

- **Display at the start of Anode Test**

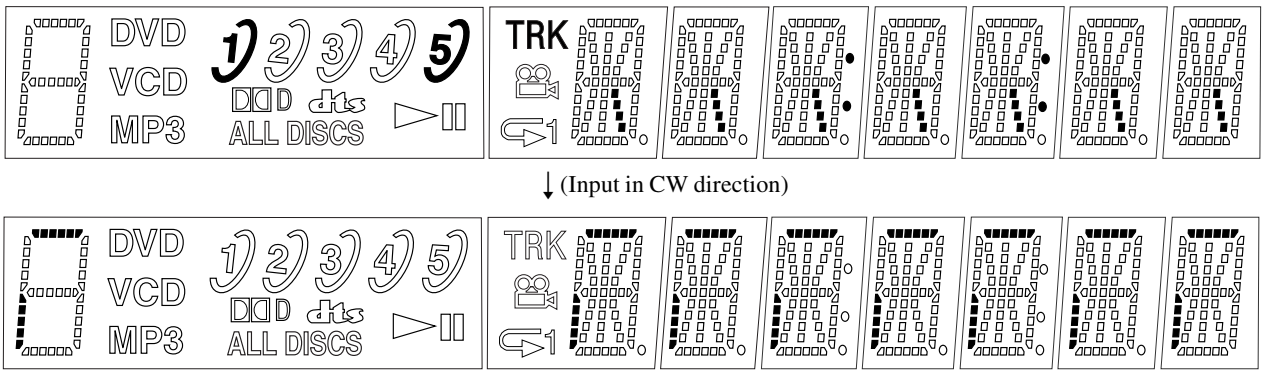

2-3-5. FLD Grid Test Display and SHUTTLE Click Operation Test

2-3-5-1. Transition Keys in Self Check Mode

- ↑ key on the remote commander
- SHUTTLE on the remote commander during Grid Test display (This unit does not provide JOG/SHUTTLE, and therefore use another DVD remote commander having the JOG/SHUTTLE)

2-3-5-2. Operation and Display

The Self Check Mode transits to this mode when ↑ key is entered. This tests whether each grid turns on individually. The first grid only of FLD turns on and other grid turn off. Each time the SHUTTLE is entered, the grid is switched in order. When SHUTTLE input is clockwise, the grid switched in 1 - 2 - 3 direction, or counterclockwise it switches in 3 - 2 - 1 direction.

- **Display at the start of Grid Test**

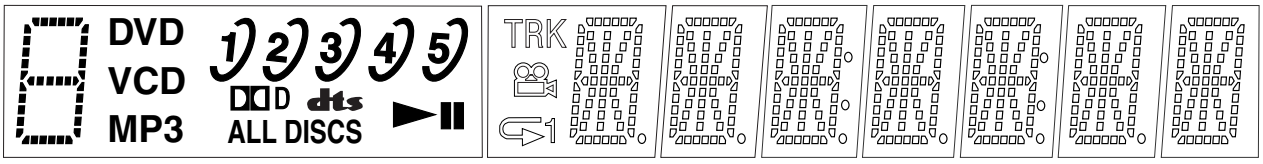

↓ (Input in CW direction)

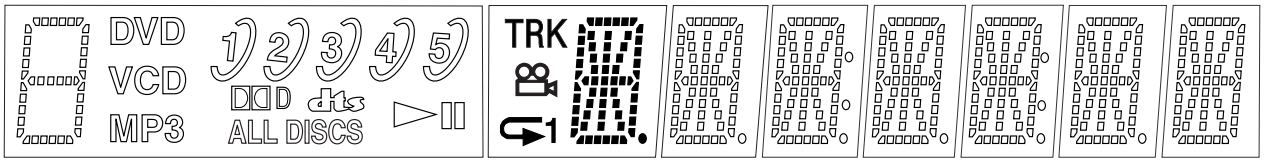

GRID ASSIGNMENT

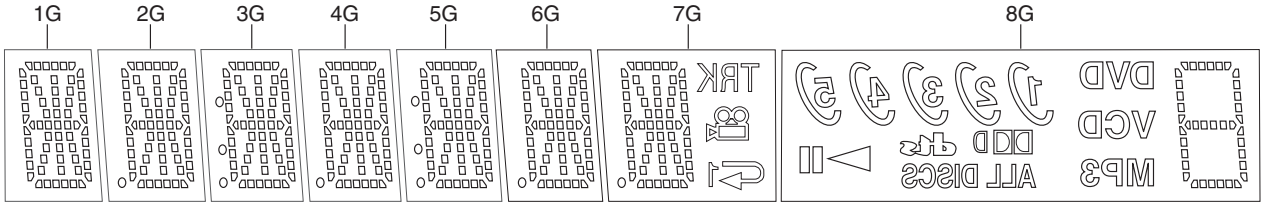

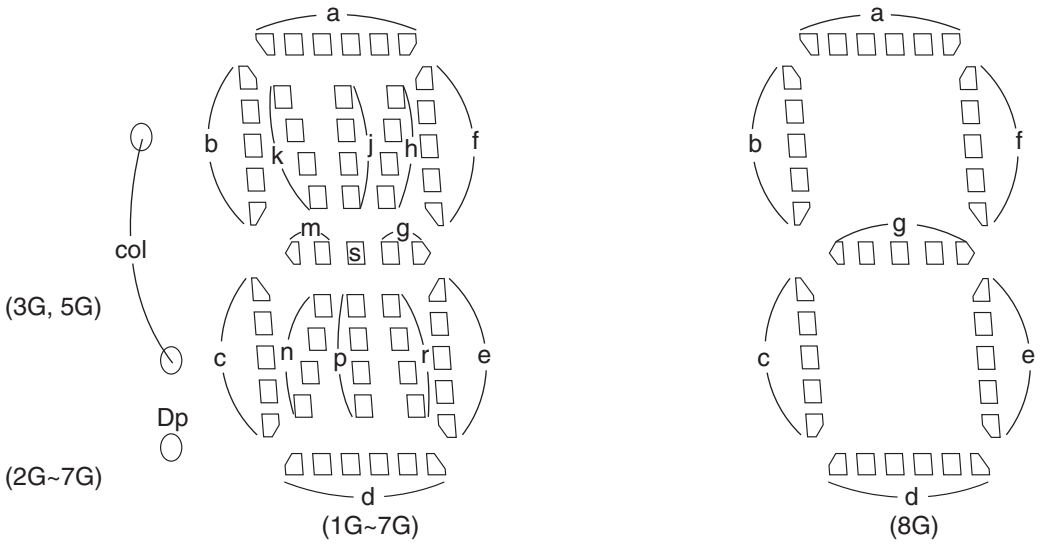

ANODE CONNECTION

	1G	2G	3G	4G	5G	6G	7G	8G
P1	n	n	n	n	n	n	n	[illegible]
P2	e	e	e	e	e	e	e	e
P3	c	c	c	c	c	c	c	c
P4	g	g	g	g	g	g	g	g
P5	s	s	s	s	s	s	s	ALL DISCS
P6	m	m	m	m	m	m	m	MP3
P7	f	f	f	f	f	f	f	f
P8	b	b	b	b	b	b	b	b
P9	h	h	h	h	h	h	h	CD
P10	j	j	j	j	j	j	j	V
P11	k	k	k	k	k	k	k	DVD
P12	a	a	a	a	a	a	a	a
P13	p	p	p	p	p	p	p	[illegible]
P14	r	r	r	r	r	r	r	[illegible]
P15	d	d	d	d	d	d	d	d
P16	–	–	col	–	col	–	TRK	[illegible]
P17	–	Dp	Dp	Dp	Dp	Dp	Dp	[illegible]
P18	–	–	–	–	–	–	[illegible]	DDD
P19	–	–	–	–	–	–	[illegible]	[illegible]
P20	–	–	–	–	–	–	[illegible]	[illegible]
P21	–	–	–	–	–	–	–	[illegible]

6-7. TROUBLESHOOTING

6-7-1. Cannot Enter Test Mode

You cannot enter the Test mode when either button has been pressed by any reason with the board assembled in the front panel. In this state, the power does not turn on even under normal condition (the unit is kept in standby state), and also no button is active and the remote commander is not accepted. In this case, disconnect the MV-044 board, and with the SELF CHECK (pin ⑩) of IF CON (IC404) on the IF-114 board kept in low state, supply AC, and the IF CON self-diagnosis mode will be forcibly activated. The IF CON (IC404) checks the SELF CHECK port only after the power on reset (only at AC supply, not in standby state). If any button is pressed, its name is displayed on the fluorescent display tube. But, if other than "NOTHING" is displayed though no button is pressed, it means that any button has been pressed.

6-7-2. Faults in Test Mode (MV-044 board)

1. The test mode menu is not displayed.

1-1. Board visual check

Check that the ICs of SYSCON (IC104), ROM (IC106 or IC107), AVD (IC403), ARP & SERVO (IC301) are working correctly.
Check that outside appearance of the ICs is normal.
Check that IC pins are not short-circuited.
Check that there is no soldering error.
Check that outside appearance of the capacitors and resistors is normal.

1-2. Power supply voltage check

Check the power voltage of the power connector (CN102).
Check the power voltage of SYSCON (IC104).
Check the power voltage of ROM (IC106 or IC107).
Check the power voltage of AVD (IC403).
Check the power voltage of ARP & SERVO (IC301).
If the power voltage has any abnormality →
Check that the power supply lines are not shorted.
Check that there is no soldering error.
If any abnormality cannot be found still →
Check that each IC is working normally.

1-3. Clock signal check

Measure the clock signal frequency at CPUCK (CL101) of SYSCON (IC104) with an oscilloscope.
If the 8.25 MHz signal appears. → Check the machine according to section 1-3-1
If the 33 MHz signal appears. → Check the machine according to section 1-3-2.
If other frequencies are output.
R110 and R113 have defective soldering, X101 crystal oscillator is defective.
If the measurement point is fixed to either "H" or "L". →
Observe XFRRST (pin-㊻) of SYSCON (IC104) with an oscilloscope.
If the measurement point is "L", check the following items.
If the IC has defective soldering, if the IC is short-circuited.
If the measurement point is "H",
→ Component X101 or SYSCON (IC104) is defective.

1-3-1. When the 8.25 MHz signal appears at CPUCK

• Check the XRD, XWRH and CS0X signal.
Observe XRD (pin-㊿), XWRH (pin-(71)), and CS0X (pin-(58)) of SYSCON (IC104) with an oscilloscope.
If these pins are fixed to either "L" (0V) or "H" (3.3V), or if these pins stay in the center voltage, check the followings.
Check if the signal line does not have the defective soldering.
Check if the signal line is short-circuited with other signal lines.
If you cannot find any problem → SYSCON (IC104) is defective.

• HA [0 to 21] signal and HD [0 to 15] signal check
Observe HA [0 to 21] (pins-(102) to (109), (111) to (118), (120), ① to ⑤) of SYSCON (IC104) and HD [0 to 15] (pins-(85) to (100)) with an oscilloscope.
If these pins are fixed to either "L" (0V) or "H" (3.3V), or if the HA pin stays in the center voltage, check the followings. (HD stays in the center voltage when it is normal.)
→ Check if the signal line does not have the defective soldering, or is short-circuited with other signal line or SYSCON (IC104) is defective.

• Reset signal check
Check if XFRRST (pin-㊻) of SYSCON (IC104) normal or not.
The signal starts up at the same time as Vcc → Defective soldering.

If the trouble does not apply to any of the above-described phenomenon, SYSCON (IC104) or ROM (IC106 or IC107) is defective.

1-3-2. When the 33 MHz signal appears at CPUCK

• WAIT signal check
Observe XWAIT (pin-(67)) of SYSCON (IC104) with an oscilloscope.
If it is fixed to "L" (0V). → Observe CS2X to CS5X (pins-(60) to (63)).
If CS2X or CS3X is "L". → AVD (IC403) has defective soldering or AVD is defective.
If CS4x or CS5X is "L". → ARP & SERVO (IC301) has defective soldering or ARP & SERVO is defective.
If any one of the above is not "L". → XWAIT or CSnX is short-circuited or has the defective soldering or AVD (IC403) is defective or ARP & SERVO (IC301) is defective.
Center voltage → The XWAIT line has defective soldering or is short-circuited or AVD (IC403) is defective or ARP & SERVO (IC301) is defective or SYSCON (IC104) is defective.

• CSnX signal check
Observe CS0X to CS5X (pins-(58) to (63)) of SYSCON (IC104) with an oscilloscope.
If they are fixed to "L" (0V) or if to center voltage → Check that the ICs do not have the defective soldering or is short-circuited with the other signal lines or SYSCON (IC104) is defective.
CS0X: ROM (IC106 or IC107)
CS2X, CS3X: AVD (IC403)
CS4X, CS5X: ARP & SERVO (IC301)

If the trouble symptom does not apply to any of the above phenomenon, SYSCON (IC104) or ROM (IC106 or IC107) is defective.

2. Test mode menu is displayed but the machine stops when menu is selected

2-1. AVD (IC403) check

Observe SDCLKO (pin-⑰7) of AVD (IC403) with an oscilloscope.

95 MHz → No problem

27 MHz → Observe the XRST, HA, HD, XRD, XWRH INT and CS signal waveform at the respective pins of AVDEC, AVD (IC403) is defective.

If the signal is other than the above frequencies → AVD (IC403) 27MHz signal line (CLKI (pin-①8), SCLKIN (pin-⑯0)) is short-circuited, IC mount is defective, AVD (IC403) is defective, PLL (IC103) is defective.

2-2. INT signal check

Observe INT0 to 2 (pins-⑯ to ⑱) of SYSCON (IC104) with an oscilloscope.

If they are fixed to "L" (0V) or fixed to the center voltage → Check that the ICs do not have the defective soldering, or are short-circuited, SYSCON (IC104) is defective, or the following ICs are not defective.

INT0: AVD (IC403)

INT1, INT2: ARP & SERVO (IC301)

2-3. If any abnormality cannot be confirmed by the above-described checks, check the CS signal that is currently output.

The CS signal other than CS0X is being output. → IC mount is defective or the IC is defective depending on the moving CS signal.

CS2X, CS3X: AVD (IC403)

CS4X, CS5X: ARP & SERVO (IC301)

If the trouble is not applicable to any of the above phenomenon, SYSCON (IC104) or ROM (IC106 or IC107) is defective.

3. If the message "SDSP No Ack" appears after the menu is displayed.

3-1. ARP & SERVO clock signal check

Check frequency of CLKIN (pin-⑮0)

33 MHz → Normal

Frequency other than 33 MHz → CLKIN is short-circuited or defective soldering or PLL (IC103) is defective or ARP & SERVO (IC301) is defective

3-2. ARP & SERVO (IC301) PLL oscillation check

Observe PLCKO (pin-⑧7) of ARP & SERVO (IC301) with an oscilloscope.

If the pin is fixed to either "L" (0V) or "H" (3.3V).

If XRST if fixed to "L". XRST has the defective soldering, In all other cases. ARP & SERVO (IC301) is defective

If it is oscillating.

HA [0 to 7] are HD [8 to 15] are short-circuited, check XSDSPIT and XSDSPCS or ARP & SERVO (IC301) is defective.

4. If trouble occurs at the specific item of the "Diag All Check".

IC mount of the NG item is defective or IC is defective.

5. Picture and audio are not output.

Check connection of CN601

Check for the defective connection of flat cable and check of damage of the flat cable.

6. Picture is output but audio is not output.

Check the audio data output (at pins-㉔, ㉘, and ㉙) of AVD (IC403)

The audio data is not output. → AVD (IC403) or audio DAC (IC601) mount is defective or power supply is defective or AVD (IC403) or audio DAC (IC601) is defective.

PLL (IC103) 512fs output check

If the frequency or waveform has abnormality. → The signal line has defective soldering or the signal line is short-circuited with other signal lines or PLL (IC103) is defective.

7. Audio is output but picture is not output. (NC615 only)

Observe pins-㊺, ㊼, ㊾, ㊶, ㊸ and ㊺ of AVD (IC403) with an oscilloscope.

If the analog signal is not output. → The signal line has the defective soldering or is short-circuited or parts are defective or AVD (IC403) is defective.

8. Audio is output but picture is not output. (NC655P only)

Observe pins-㊲, ㊳, ㊴, ㊷, ㊸ and ㊹ of VDAC (IC504) with an oscilloscope.

If the analog signal is not output. → The signal line has the defective soldering or is short-circuited or parts are defective or VDAC (IC504) is defective.

6-7-3. Drive Auto Adjustment stops due to error.

The ARP & SERVO (IC301) analog circuit of MV-044 board is defective or RF-Amp (IC201) or M-Driver (IC202) peripheral circuit is defective or optical pickup block is defective or flat cable connection is defective.

6-7-4. The product itself is defective.

• If MV044 does not have any problem,

The board other than MV-044 board is defective or connection is defective or optical pickup block is defective or mechanism deck is defective

1. Power LED does not light in Red when the AC power is turned on.

Check the EVER –13V (pin-③), EVER+3.3V (pin-⑪), EVER+11V (pin-⑬) voltage of the power supply block CN201.

If voltage is abnormal. ⟶ The power supply block is defective.

2. Power LED does not light in green after transmitting the POWER on command. It remains lighting in red (in the STANDBY mode).

2-1. Check the EVER -13V (pin-③), EVER+3.3V (pin-⑪), EVER+11V (pin-⑬) voltage at CN201 of the power supply block/

If voltage is abnormal. ⟶ The power supply block is defective.

2-2. Check if the fuse on the IF board has blown of not.

If the fuse has blown ⟶ Replace the fuse.

2-3. Check the P-CONT (pin-②) at CN401 of the IF-114 board when the POWER button is pressed.

If it remains at "L",

⟶ The signal line has the defective soldering or it is short-circuited with other signal lines or capacitor or resistor is defective or IFCON is defective or connection between the power supply block and the IF-114 board is defective, or connector installation is defective, or the power supply block is defective.

2-4. Check if the button is kept depressed in the IFCON self mode.

If the button is kept depressed. ⟶ The front panel is defective, or IF-114 board is defective.

2-5. Check PONCHK (pin-㉚) of IFCON (IC404) on the IF-114 board.

If it is 0.5 V or more. ⟶ The power supply is defective, or IF-114 board is defective.

3. Power LED becomes red (STANDBY mode) in at once through Power LED lights in Green once when the POWER button is pressed.

3-1. Check CN201 voltage of the power supply block when the LED lights in green.

If voltage is abnormal. ⟶ The power supply block is defective, or the IF-114 board is defective, or MV044 is defective

3-2. Check XFRRST (pin-⑧) at CN101 on the MV-044 board.

If it is fixed to "L". ⟶ The signal line has defective soldering, or is short-circuited with other signal lines, or parts are defective.

3-3. Check IFBSY (pin-⑤), XIFCS (pin-⑥), SI0 (pin-④), SO0 (pin-①) and SC0 (pin-③) at CN101

If they are fixed to "H" or "L".

⟶ The signal line has defective soldering, or is short-circuited with other signal line, or parts are defective, or SYSCON (IC104) is defective

If they change between "L/H".

Connector installation is defective, or the IF-114 board is defective, or SYSCON (IC104) is defective.

If they stay in the center voltage.

Poor connection of flexible wiring board such as it is inserted in an angle diagonally, or defective soldering, or is short-circuited with other signal line.

3-4. Check PONCHK (pin-㉚) of IFCON (IC404) on the IF-114 board.

If rise-up time from 0.5 V to 1.5 V or more takes longer time, or it does not exceed 1.5 V or more. ⟶ The IF board is defective.

4. The LED lights in green but the FL display does not light when the POWER button is pressed.

Connection between the power supply block and the IF-114 board is defective, or connector installation is defective, or the IF-114 board is defective.

5. Both picture and audio are not output.

Connection between the power supply block and the IF-114 board is defective, or connection between the IF-114 board is defective, or connection between the MV-044 board is defective, or connector installation is defective.

6. Picture is not normal. (Block noise or others appear.)

The MV-044 board AVD (IC403) or SDRAM (IC404, IC405) is defective, or ARP & SERVO (IC301) is defective.

6-8. MECHANISM TEST MODE ADJUSTMENT

• Introduction
The mechanism test mode is designed for mechanism check. Do not use this mode for purposes other than the mechanism check.

6-8-1. How to enter the mechanism test mode

While the machine is in the standby mode, press the keys on the remote commander in the order starting from [TITLE] → [CLEAR] → [POWER] to enter the remote commander service mode. Then press the numeric key [3] and select "3. Mecha Test Mode".

6-8-2. Types of the mechanism test mode

When you enter the mechanism test mode, the following menu appears.

```
### Mecha Test Mode ###

Please Select Test Mode

1. Aging
2. Check
3. Voltage

_
                    Exit: RETURN
```

Press the desired numeric number on the display. Then you enter the selected mode.
When "1. Aging" is selected, you enter the mechanism aging mode.
When "2. Check" is selected, you enter the mechanism check mode.
When "3. Voltage" is selected, you enter the voltage check mode.

6-8-3. Description of Each Mode

3-1. Mechanism aging mode

This is the aging mode for mechanism. When this mode is selected, the mechanism is initialized first.

3-1-1. Selection of aging mode

When initialization is completed, the following menu appears. Select the desired aging mode from the following menu.

```
### Mecha Aging ###

Please Select Aging Mode

1. All (DiscCheck On)
2. All (DiscCheck Off)
3. Table
4. Tray
_

                    Exit: RETURN
```

When you select the desired numeric number on display, the corresponding aging mode will be selected.

• "1. All (DiscCheck On)"
This is the overall aging mode (with disc check).
Contents of the aging operations are as follows. Table and tray are moved in the following sequence: TableClose (DiscNumber Random) → ChuckUp → DiscCheck → TableEx Open → TrayExMove (Left → Right) → TableExClose → ChuckDown → TableOpen. A series of operation as described above is called as one full count, and is repeated.

• "2. All (DiscCheck Off)"
This is the overall aging mode (without disc check).
Contents of the aging operations are as follows. Table and tray are moved in the following sequence: TableClose(DiscNumber Random) → ChuckUp → TableExOpen → TrayExMove(Left → Right) → TableExClose → ChuckDown → TableOpen. A series of operation as described above is called as one full count, and is repeated.

• "3. Table"
This is the table aging mode.
Contents of the aging operations are as follows. Table is rotated in the following sequence: TableClose(Tray NoMove) → ChuckUp → TableExOpen → TableExClose → ChuckDown → TableOpen. A series of operation as described above is called as one full count, and is repeated.

• "4. Tray"
This is the tray aging mode.
Contents of the aging operations are as follows. Tray is rotated one full turn in the clockwise direction and is rotated one full turn in the counter-clockwise direction. One full rotation of tray is called as one full count, and is repeated. The disc number is reduced by one after every 20 counts.

3-1-2. Setting number of times of aging

When aging mode is selected, the following menu appears. Set the number of times of aging in this menu.

```
### Mecha Aging ###

Input Aging Count
Input Max : 65535
No Input  : Infinity
_

                    Exit: RETURN
```

Use the numeric keys to enter the desired number. Then press [ENTER] to set the number. If you press [ENTER] without entering any number, the number of times of aging becomes infinite.

3-1-3. Setting disc

When the number of times of aging is set, the table is opened and the following menu appears. Set a test disc while the following menu is displayed.

```
### Mecha Aging ###

Please Select Aging Mode

ENTER : Aging Start
RIGHT : Disc Skip (Wed)
LEFT  : Disc Skip (Rvs)
–

                    Exit: RETURN
```

When you press [RIGHT], the tray moves in the direction of Disc Number +1. When you press [LEFT], the tray moves in the direction of Disc Number –1. Press [ENTER] to start aging.

3-1-4. While aging is in progress

While aging is in progress, the following screen appears.

```
### Mecha Aging ###

STOP        : Aging Stop
MaxCount    : 50000
NowCount    : 1
Disc Number: 1
DVD SL 12cm

                    Exit: RETURN
```

Max Count indicates the number of times of aging. Now Count indicates the present number of times of aging. Disc Number indicates the disc number of the present chucking position.
The indication "DVD SL 12cm" under the Disc Number indicates the disc type when disc check is performed.
In addition to it, the following contents are displayed on the FL display tube.

```
[A] [B] – [        C        ]
```

"A" indicates the aging mode.

1: All (DiscCheck On)
2: All (DiscCheck Off)
3: Table
4: Tray

"B" indicates the aging operation. (Disc number is displayed during the Tray aging mode.)

1: Table Close
2: Chuck Up
3: DiscCheck
4: Table ExOpen
5: Tray ExMove
6: Table ExClose
7: Chuck Down
8: Table Open

"C" indicates the number of times of aging.

If you press [STOP] or [RETURN] during aging, the aging operation is terminated. If you press [PAUSE] during aging, the aging operation is paused. Pressing any key resumes the aging operation.

3-1-5. Terminating the aging operation

The aging operation terminates when the following conditions are satisfied.

- The aging is performed for the set number of times.
- The aging is terminated as [STOP] or [RETURN] is pressed.
- An abnormality occurs in mechanism.

When the aging operation ends normally, table is opened and the following menu appears.

```
### Mecha Aging ###

STOP        : Aging Stop
MaxCount    : 50000
NowCount    : 50000
Disc Number : 1
DVD SL 12cm

ENTER       : Exit
RIGHT       : Disc Skip (Wed)
LEFT        : Disc Skip (Rvs)
–
                    Exit: RETURN
```

When you press [RIGHT] , the tray moves in the direction of Disc Number +1. When you press [LEFT] , the tray moves in the direction of Disc Number –1. Press [ENTER] to terminate the aging mode after tray is closed and chucked.

If any abnormality occurs during the aging mode, the aging operation is stopped and the following menu appears.

```
### Mecha Aging ###

STOP        : Aging Stop
MaxCount    : 50000
NowCount    : 1
Disc Number: 1
DVD SL 12cm

Table Error! (*1)
Table Close Error! (*2)
Push Any Key
–
                    Exit: RETURN
```

*1 indicates the mechanical part where error occurs.
*2 shows the mode when error occurs.

3-2. Mecha Check Mode

This is the mode called "Mecha Check" that checks if the mechanical loads to the mechanism is within the allowable range or not. For the table, the operating time in each mode is measured for judgment. For the tray, the time of guide slit is measured for judgment. When the "Mecha Check" mode is selected, the following menu appears.

```
### Mecha Check ###

ENTER : MechaInitial
PLAY  : All Check
STOP  : Table Check
RIGHT : Tray Check (Right)
LEFT  : Tray Check (Left)
DISP  : Limit Set
_

                    Exit: RETURN
```

3-2-1. Operation contents

Operation contents of each mode are described below.

- **ENTER: MechaInitial**
  It initializes the mechanism. If the mechanism is not initialized, pressing any buttons of either [STOP] or [RIGHT] or [LEFT] activates no operations. In such a case, initialize the mechanism by executing this command.

- **PLAY: All Check**
  Both of the table and tray are checked in this mode. Operation check is performed in the following order starting from MechaInitial → ChuckUp → TableExOpen → TableExClose → ChuckDown → TableOpen → TableClose → TrayRightTurn → TrayLeftTurn. Disc sensor is also check at the same time. If a single disc is present on the tray, OK is judged. In all other cases, NG is judged.

- **STOP: Table Check**
  Table is checked. Operation check is performed in the following order starting from ChuckUp → TableExOpen → TableExClose → ChuckDown → TableOpen → TableClose.

- **RIGHT: Tray Check (Right)**
  Tray is checked. The tray is rotated by full turn in the clockwise direction.

- **LEFT: Tray Check (Left)**
  Tray is checked. The tray is rotated by full turn in the counter-clockwise direction.

- **DISP: Limit Set**
  It sets the limit value of each check. When [DISPLAY] is pressed, the following menu appears.

```
### Mecha Check ###

Limit Time
1. Load Min 2000 ms
2. Load Max3000 ms
3. Chuck Min 300 ms
4. Chuck Max 600 ms
5. Guide Min 120 ms
6. Guide Max 150 ms
Change Number : 1
Limit Time : 999_

                    Exit: RETURN
```

Each item has the following meaning.

- LoadMin : Lower limit of operating time between TableOpen-TableClose and between TableExOpen-TableExClose
- LoadMax : Upper limit of operating time between TableOpen-TableClose and between TableExOpen-TableExClose.
- ChuckMin: Lower limit of operating time between ChuckUp-ChuckDown.
- ChuckMax: Upper limit of operating time between ChuckUp-ChuckDown.
- GuideMin: Lower limit of the passing time over the guide slit.
- GuideMax: Upper limit of the passing time over the guide slit.

To change the limit value, select the desired item number by enter the number from the keyboard. Then enter the data to set. The data up to 9999 can be entered. If you press [RETURN] or [ENTER] when entering the item number, the display returns to the previous menu.

3-2-2. Result display

① AllCheck result display

When AllCheck is completed, the following display appears.

```
### Mecha Check ###

Checkresult : All OK!

Exist Disc  : 3
NG Number   : 2    11


PLAY : All Check Start
NEXT : DetailedDisplay
DISP : Limit Set

                    Exit: RETURN
```

• Check Result

When the test result is all OK, the message "AllOK!" appears. If any item is found defective, "NG!" is displayed. The conditions to show NG are shown below.

"Operation time has exceeded either upper limit or lower limit."
"Disc is not inserted or 2 or more discs are detected."
"Either tray or table does not move."

• Exist Disc

The number where disc is located, is shown.

• NG Number

This message appears when the test result is NG. The displayed numbers correspond to the following operations.

Table

1: Open → Down
2: Down → Open
3: Up → ExOpen
4: ExOpen → Up
5: Up → Down
6: Down → Up

Tray (DiscNumber)

11: 1 → 2	21: 1 → 5
12: 2 → 3	22: 5 → 4
13: 3 → 4	23: 4 → 3
14: 4 → 5	24: 3 → 2
15: 5 → 1	25: 2 → 1

If any of the following buttons is pressed while this display is being shown, the following operations start.

When [PLAY] is pressed, AllCheck starts.
When [NEXT] is pressed, details of measurement result are displayed.
When [DISPLAY] is pressed, the limit setting menu appears.
When any other key is pressed, the display returns to the main menu.

② TableCheck result display

When table check is completed, the following display appears.

```
### Mecha Check ###

Load Time
01 : Open –> Down    : 2709 ms OK
02 : Down –> Open    : 2277 ms OK
03 : Up –> ExOpen    : 2244 ms OK
04 : ExOpen –> Up    : 2819 ms OK
05 : Up –> Down  :  407 ms OK
06 : Down –> Up  :  422 ms OK
Push Any Key
_
                    Exit: RETURN
```

The operation time between each operation segments is displayed (in unit of ms). In the right of the time display, judgment if the time is OK or NG is displayed. This judgment of OK or NG is displayed on the FL display tube. If the remote commander [UP] or [DOWN] key is pressed, results of measurement of each operation segment are displayed on FL display.
When [NEXT] is pressed during AllCheck, result of the next measurement is displayed. When [PREVIOUS] is pressed during AllCheck, result of the previous measurement is displayed. If any other key is pressed, display returns to the main menu.
In the TableCheck mode, if any key is pressed, display returns to the main menu.

③ TrayCheck (Right) result display

After tray check is completed by rotating it in clockwise direction, the following display appears.

```
### Mecha Check ###

GuideSlit Time (Right)
11 : 1 –> 2 : 139,138 ms OK
12 : 2 –> 3 : 138,137 ms OK
13 : 3 –> 4 : 138,138 ms OK
14 : 4 –> 5 : 139,138 ms OK
15 : 5 –> 1 : 140,139 ms OK
Exist Disc : 3
Push Any Key
_
                    Exit: RETURN
```

The guide slit time (in units of ms) of each operation segment of tray is displayed. In the right of the time display, judgment if the time is OK or NG is displayed. The ExistDisc indicates the number where disc is located. This judgment of OK or NG is displayed on the FL display tube. If the remote commander [UP] or [DOWN] key is pressed, results of measurement of each operation segment are displayed on FL display.
When [NEXT] is pressed, result of the next measurement is displayed. When [PREVIOUS] is pressed, result of the previous measurement is displayed. If any other key is pressed, display returns to the main menu.
In the TrayCheck mode, if any key is pressed, display returns to the main menu.

④ TrayCheck (Left) result display

After tray check is completed by rotating it in the counter-clockwise direction, the following display appears.

```
### Mecha Check ###

GuideSlit Time (Left)
21 : 1 –> 5 : 139,138 ms OK
22 : 5 –> 4 : 138,137 ms OK
23 : 4 –> 3 : 138,138 ms OK
24 : 3 –> 2 : 139,138 ms OK
25 : 2 –> 1 : 140,139 ms OK
Exist Disc : 3
Push Any Key
–
                    Exit: RETURN
```

The guide slit time (in units of ms) of each operation segment of tray is displayed. In the right of the time display, judgment if the time is OK or NG is displayed. The ExistDisc indicates the number where disc is located. This judgment of OK or NG is displayed on the FL display tube. If the remote commander [UP] or [DOWN] key is pressed, results of measurement of each operation segment are displayed on FL display.

When [NEXT] is pressed, result of the next measurement is displayed.

When [PREVIOUS] is pressed, result of the previous measurement is displayed. If any other key is pressed, display returns to the main menu.

In the TrayCheck mode, if any key is pressed, display returns to the main menu.

3-3. Voltage Check Mode

This mode checks the drive voltages of tray and table. Because the full drive voltage is applied to each motor in this mode, do not execute this mode while the mechanism is being connected. When this mode is selected, the following menu appears.

```
### Voltage Check ###

RIGHT : MOTOR +
LEFT  : MOTOR –
ENTER : STOP
–
                    Exit: RETURN
```

When [PLAY] is pressed, AllCheck starts.

When [RIGHT] is pressed, the positive (+) voltage is applied to the motors of tray and table.

When [LEFT] is pressed, the negative (+) voltage is applied to the motors of tray and table.

When [ENTER] is pressed, voltage is stopped to be applied to the motors of tray and table.

Press [RETURN] to exit this mode.

MEMO

SECTION 7
REPAIR PARTS LIST

7-1. EXPLODED VIEWS

NOTE:

- -XX, -X mean standardized parts, so they may have some differences from the original one.
- Items marked "*" are not stocked since they are seldom required for routine service. Some delay should be anticipated when ordering these items.
- The mechanical parts with no reference number in the exploded views are not supplied.
- Color Indication of Appearance Parts
  Example:
  KNOB, BALANCE (WHITE) . . . (RED)
  ↑ Parts of Color ↑ Cabinet's Color

- Abbreviation
  US : USA model
  CND : Canada model
  E : Latin model
  MX : Mexico model
  SP : General Area model
  AUS : Australia model

The components identified by mark ⚠ or dotted line with mark ⚠ are critical for safety. Replace only with part number specified.

Les composants identifiés par une marque ⚠ sont critiques pour la sécurité.
Ne les remplacer que par une pièce portant le numéro spécifié.

7-1-1. OVERALL SECTION

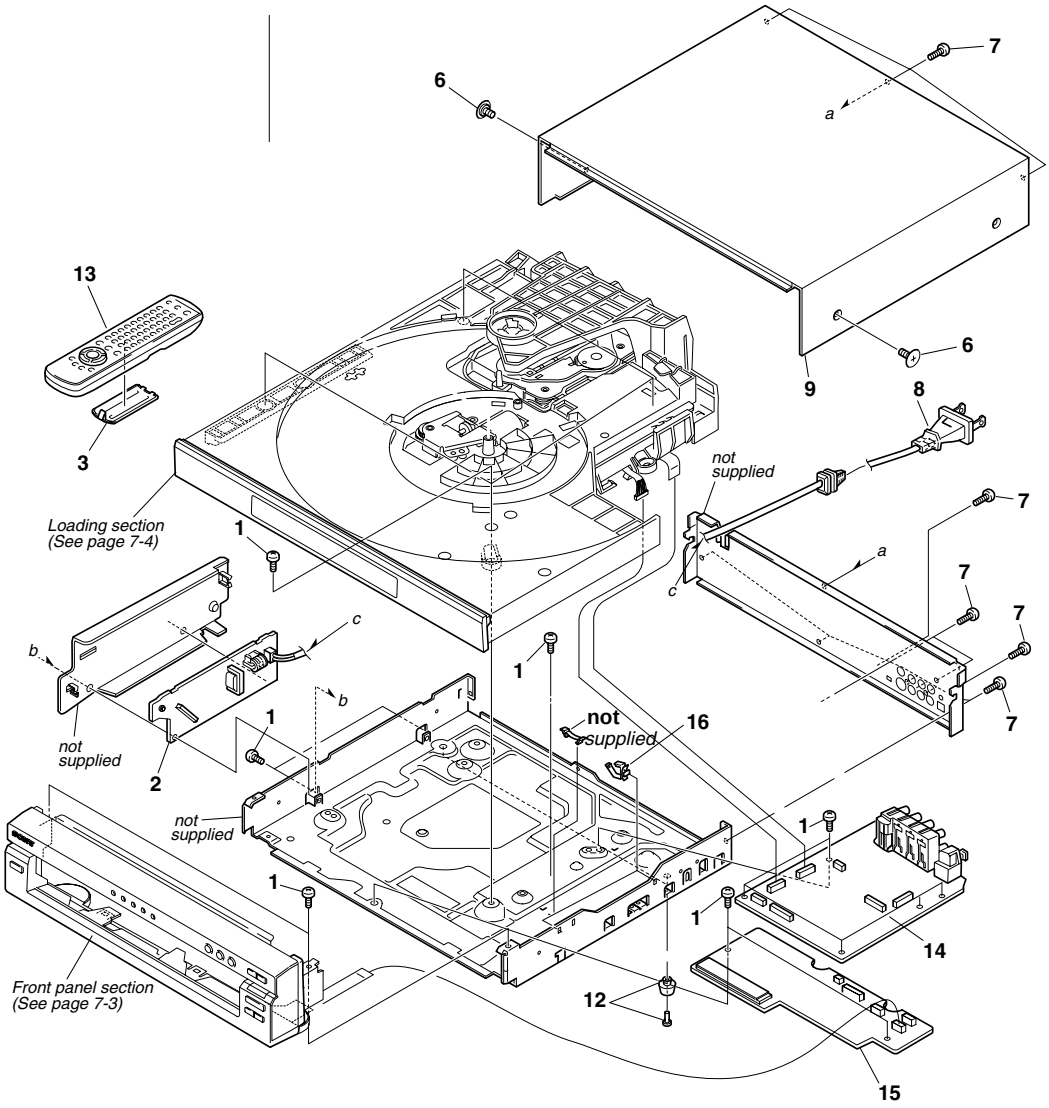

Ref. No.	Part No.	Description	Remark
1	3-077-331-21	SUMITITE +BV3 (3-CR)	
⚠2	1-478-538-11	POWER BLOCK (US,CND,MX)	
	1-478-539-13	POWER BLOCK (AUS,E,SP)	
3	3-071-119-11	COVER, BATTERY	
5	3-087-816-01	FR SCREW (+PTPLWH M2.6)	
6	3-070-883-41	SCREW TAPPING (SILVER)	
6	3-070-883-31	SCREW TAPPING (BLACK)	
7	3-077-331-11	SUMITITE +BV3 (3-CR)	
⚠8	1-828-451-21	POWER-SUPPLY CORD (US,CND,MX)	
⚠8	1-828-450-21	POWER-SUPPLY CORD (E,SP)	
⚠8	1-828-452-21	POWER-SUPPLY CORD (AUS)	
9	X-2025-497-1	CASE ASSY,UPPER(S-S) (SILVER)	
9	X-2025-496-1	CASE ASSY,UPPER(B-S) (BLACK)	

Ref. No.	Part No.	Description	Remark
12	3-957-819-01	FOOT	
13	1-478-546-11	REMOTE COMMANDER (RMT-D168A)(US,CND,MX,E)	
13	1-478-546-21	REMOTE COMMANDER (RMT-D168P)(AUS,SP)	
14	A-6072-113-A	MV-044 BOARD COMPLETE(US,CND)	
14	A-1062-850-A	MV-044 BOARD COMPLETE(E,MX)	
14	A-1062-854-A	MV-044 BOARD COMPLETE (SP)	
14	A-1062-852-A	MV-044 BOARD COMPLETE (AUS)	
15	A-6072-099-A	IF-114 BOARD COMPLETE (SP)	
16	3-632-494-01	REUSE CLAMP	

Note :	Note :
The components identified by mark ⚠ or dotted line with mark ⚠ are critical for safety. Replace only with part number specified.	Les composants identifiés par une marque ⚠ sont critiques pour la sécurité. Ne les remplacer que par une pièce portant le numéro spécifié.

7-1-2. FRONT PANEL SECTION

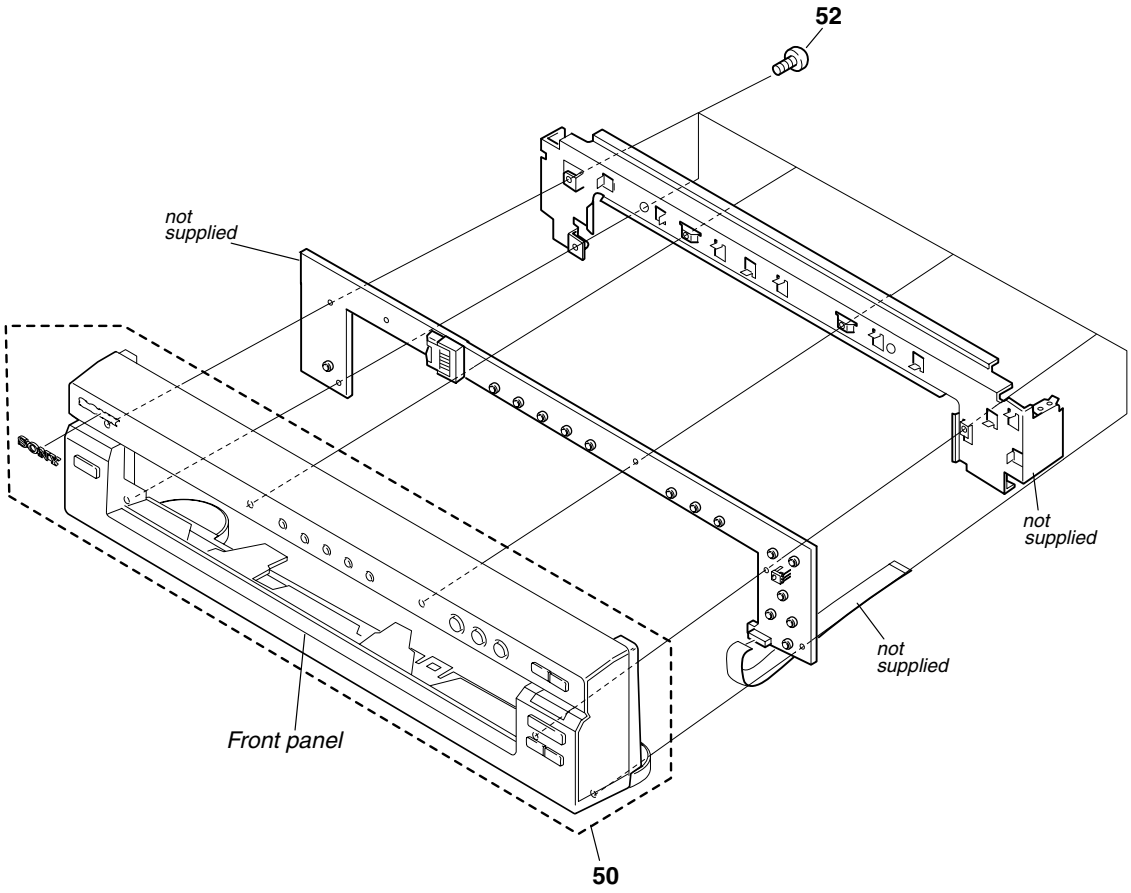

Ref. No.	Part No.	Description	Remark
50	X-3954-410-2	PANEL ASSY, FRONT (P-B) (BLACK)	
50	X-3954-411-2	PANEL ASSY, FRONT (P-S) (SILVER)	
50	X-3954-414-2	PANEL ASSY, FRONT (P-H) (SILVER)	
50	X-3954-421-2	PANEL ASSY, FRONT (P-L) SILVER	
52	3-087-053-01	+BVTP2-6 (3CR)	

7-1-3. LOADING SECTION

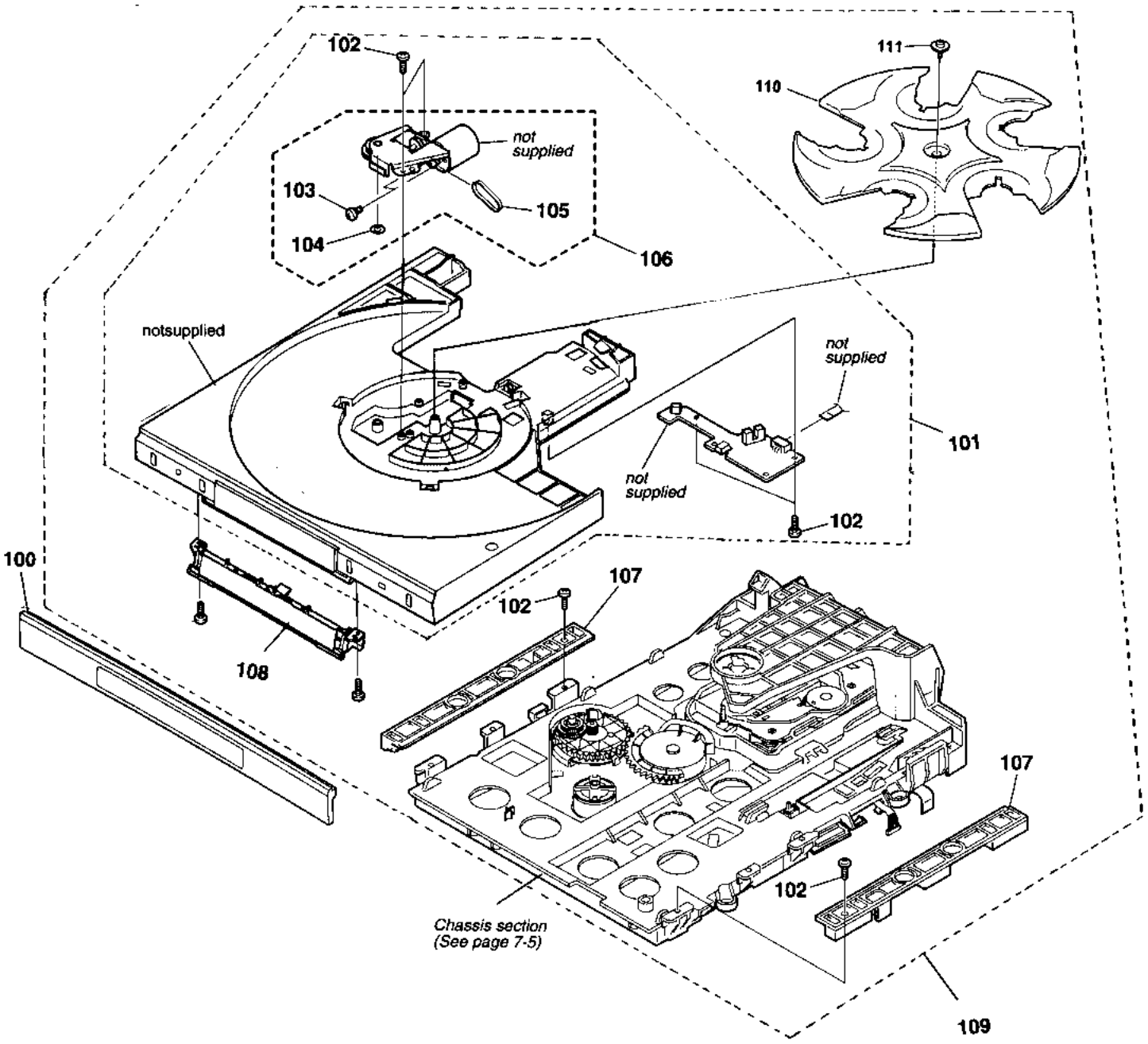

Ref. No.	Part No.	Description	Remark
100	X-3954-415-1	COVER ASSY, TRAY (P-B) (BLACK)	
100	X-3954-416-1	COVER ASSY, TRAY (P-S) (SILVER)	
101	A-6072-088-A	TABLE ASSY	
102	3-087-053-01	+BVTP 2.6 (3CR)	
103	3-088-617-01	SCREW, +P M3X3 (3CR)	
104	3-016-533-11	WASHER (FR), STOPPER	
105	3-074-725-01	BELT, TD	
106	A-6060-640-B	UNIT ASSY, TD	
107	3-074-737-01	PLATE (GUIDE)	
108	X-3954-419-1	MIRROR ASSY, REFLECTOR	
109	A-6072-087-A	LODING ASSY (T)	
110	3-091-487-01	TRAY	
111	3-087-816-01	FR SCREW (+PTPLWH M2.6)	

7-1-4. CHASSIS SECTION

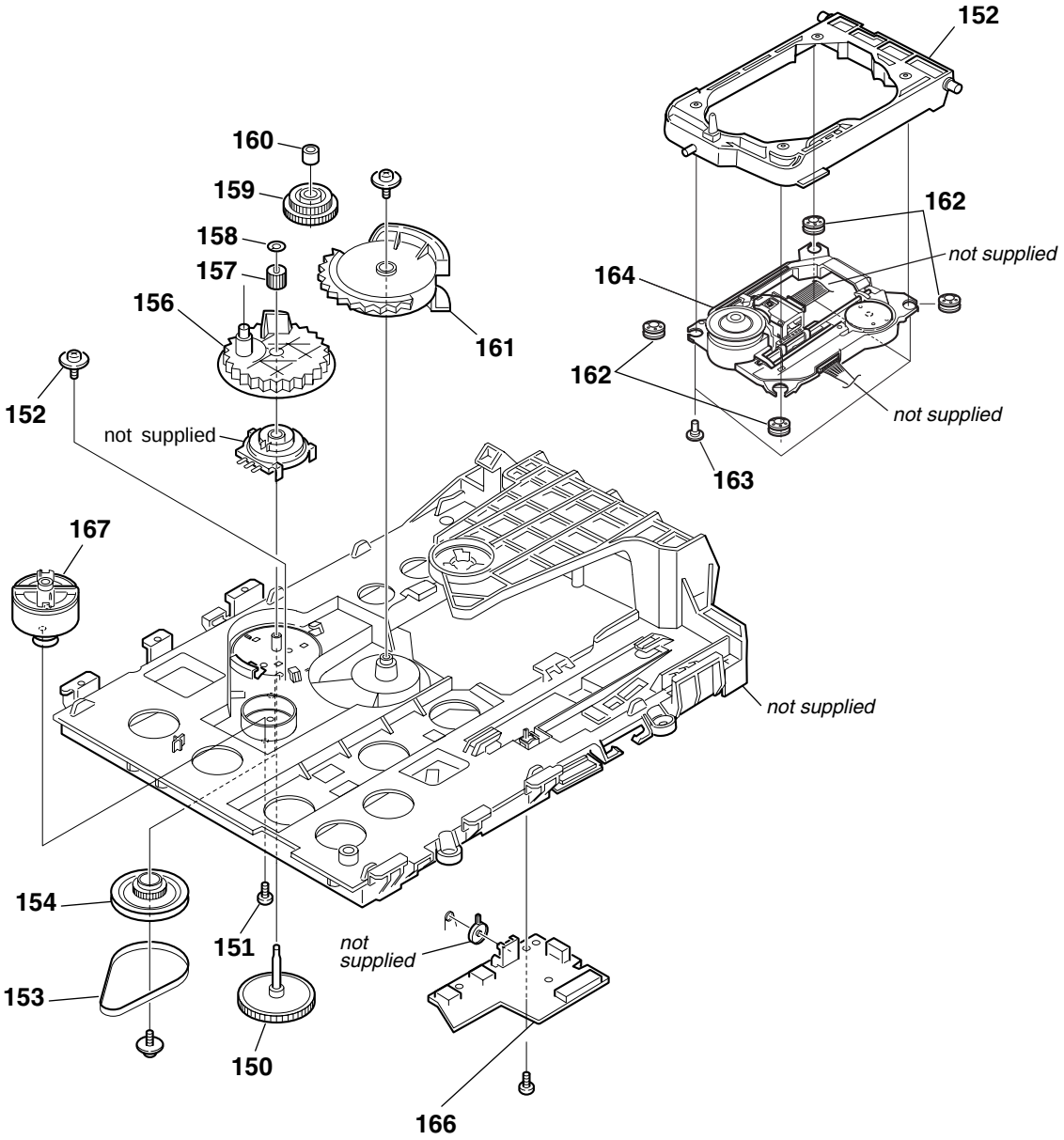

Ref. No.	Part No.	Description	Remark
150	3-091-491-01	GEAR, SHAFT	
151			
152	3-091-493-01	BU HOLDER	
153	2-022-451-01	BELT (LOADING)	
154	3-074-744-01	GEAR (LOADING A)	
156	3-091-490-01	GEAR, SWING	
157	3-074-741-01	GEAR (LOADING B)	
158	3-016-533-11	WASHER (FR), STOPPER	
159	3-074-740-01	GEAR (LOADING C)	
160	3-074-739-01	COLLAR (SWING)	

Ref. No.	Part No.	Description	Remark
161	3-091-489-01	GEAR, CHUCK	
162	3-088-372-01	INSULATOR	
163	3-087-599-01	INSULATOR SCREW	
164	8-820-255-02	KHM-310AAB/C2RP	
167	X-3954-479-1	MOTOR ASSY, LOADING	

FR-218 **IF-114**

7-2. ELECTRICAL PARTS LIST

NOTE:
- Due to standardization, replacements in the parts list may be different from the parts specified in the diagrams or the components used on the set.
- -XX, -X mean standardized parts, so they may have some difference from the original one.
- Items marked "*" are not stocked since they are seldom required for routine service. Some delay should be anticipated when ordering these items.
- CAPACITORS:
  uF: µF
- COILS
  uH: µH
- RESISTORS
  All resistors are in ohms.
  METAL: metal-film resistor
  METAL OXIDE: Metal Oxide-film resistor
  F: nonflammable
- SEMICONDUCTORS
  In each case, u: µ, for example:
  uA...: µA... , uPA... , µPA... , uPB... , µPB... , uPC... , µPC... , uPD..., µPD...
- Abbreviation
  US : USA model
  CND : Canada model
  E : Latin model
  MX : Mexico model
  SP : General Area model
  AUS : Australia model

When indicating parts by reference number, please include the board name.

The components identified by mark ⚠ or dotted line with mark ⚠ are critical for safety. Replace only with part number specified.

Les composants identifiés par une marque 0 sont critiques pour la sécurité.
Ne les remplacer que par une pièce portant le numéro spécifié.

Ref. No.	Part No.	Description				Remark
		FR-218 BOARD COMPLETE **********				
		<CONNECTOR>				
CN601	1-750-186-11	CONNECTOR, BOARD TO BOARD 6P				
		<JUMPER RESISTOR>				
JR601	1-216-295-71	CONDUCTOR, CHIP 0				
		<SWITCH>				
S601	1-762-875-21	SWITCH, KEYBOARD				
		•				
	* A-6072-099-A	IF-114 BOARD COMPLETE (SP) **********				
		<CAPACITOR>				
C401	1-115-339-91	CAP, CERAMIC	0.1UF B	10.00%	50V	
C403	1-124-589-11	CAP, ELECT	47UF	20.00%	16V	
C405	1-115-339-91	CAP, CERAMIC	0.1UF B	10.00%	50V	
C406	1-162-970-91	CAP, CERAMIC	10000PF B	10.00%	25V	
C407	1-107-826-91	CAP, CHIP CERAMIC	100000PF B	10.00%	16V	
C408	1-107-826-91	CAP, CHIP CERAMIC	100000PF B	10.00%	16V	
C409	1-107-826-91	CAP, CHIP CERAMIC	100000PF B	10.00%	16V	
C417	1-130-481-91	CAP, PE TEREPHTHALATE	0.0068UF	5.00%	50V	
C418	1-115-339-91	CAP, CERAMIC	10000PF B	10.00%	50V	
C419	1-104-666-91	CAP, ELECT	220UF	20.00%	25V	
C420	1-163-021-91	CAP, CERAMIC	10000PF B	10.00%	50V	
C422	1-115-339-91	CAP, CERAMIC	0.1UF B	10.00%	50V	
C423	1-163-021-91	CAP, CERAMIC	10000PF B	10.00%	50V	
C425	1-126-965-91	CAP, ELECT	22UF	20.00%	50V	
C431	1-115-339-91	CAP, CERAMIC	0.1UF B	10.00%	50V	
C432	1-163-009-91	CAP,CHIP CERAMIC	1000PF B	10.00%	50V	
C493	1-163-251-91	CAP,CHIP CERAMIC	100PF	5.00%	50V	

Ref. No.	Part No.	Description	Remark
		<CONNECTOR>	
CN401	1-568-934-11	PIN, CONNECTOR 7P	
CN402	1-818-174-11	CONNECTOR, FPC/FFC 13P	
CN403	1-815-381-11	CONNECTOR, FPC/FFC 5P	
CN404	1-568-938-11	PIN, CONNECTOR 11P	
CN405	1-817-416-11	CONNECTOR FPC/FFC (11P)	
		<DIODE>	
D402	8-719-069-54	DIODE UDZSTE-175.1B	
D403	8-719-041-97	DIODE MA113-(TX)	
D404	8-719-041-97	DIODE MA113-(TX)	
D405	8-719-041-97	DIODE MA113-(TX)	
D406	8-719-041-97	DIODE MA113-(TX)	
D412	8-719-422-41	DIODE MA8051-L-TX	
		<TERMINAL>	
ET402	1-780-111-11	EARTH TERMINAL	
		<IC>	
IC403	8-759-598-69	IC BA6956AN	
IC404	6-804-146-01	IC 86CK74AFG-1840	
IC408	6-704-114-01	IC S-80828CNUA-B8NT2G	
		<JUMPER RESISTOR>	
JR400	1-216-295-71	CONDUCTOR, CHIP 0	
JR401	1-216-295-71	CONDUCTOR, CHIP 0	
JR402	1-216-295-71	CONDUCTOR, CHIP 0	
JR403	1-216-295-71	CONDUCTOR, CHIP 0	
JR404	1-216-295-71	CONDUCTOR, CHIP 0	
JR405	1-216-295-71	CONDUCTOR, CHIP 0	
JR406	1-216-295-71	CONDUCTOR, CHIP 0	
JR407	1-216-295-71	CONDUCTOR, CHIP 0	
JR408	1-216-295-71	CONDUCTOR, CHIP 0	
JR409	1-216-295-71	CONDUCTOR, CHIP 0	
JR411	1-216-295-71	CONDUCTOR, CHIP 0	
JR412	1-216-295-71	CONDUCTOR, CHIP 0	
JR413	1-216-295-71	CONDUCTOR, CHIP 0	

IF-114 **MV-044**

Ref. No.	Part No.	Description			Remark
JR414	1-216-295-71	CONDUCTOR, CHIP 0			
JR415	1-216-295-71	CONDUCTOR, CHIP 0			
JR416	1-216-295-71	CONDUCTOR, CHIP 0			
JR417	1-216-295-71	CONDUCTOR, CHIP 0			
JR418	1-216-295-71	CONDUCTOR, CHIP 0			
JR419	1-216-295-71	CONDUCTOR, CHIP 0			
JR420	1-216-295-71	CONDUCTOR, CHIP 0			
JR421	1-216-295-71	CONDUCTOR, CHIP 0			
JR422	1-216-295-71	CONDUCTOR, CHIP 0			
JR423	1-216-295-71	CONDUCTOR, CHIP 0			
JR424	1-216-295-71	CONDUCTOR, CHIP 0			
JR425	1-216-295-71	CONDUCTOR, CHIP 0			
JR426	1-216-295-71	CONDUCTOR, CHIP 0			
JR427	1-216-295-71	CONDUCTOR, CHIP 0			
JR428	1-216-295-71	CONDUCTOR, CHIP 0			
JR429	1-216-295-71	CONDUCTOR, CHIP 0			
		<SHORT>			
JS403	7-611-005-04	WIRE, TIN PLATING			
		<COIL>			
L401	1-456-709-11	COIL, CHOKE 82UH			
LP401	1-780-019-11	WIRE CLIP			
		<FLUORASCENT INDICATOR>			
ND401	1-518-985-11	VACUUM FLUORASCENT DISPLAY 0V 0MA			
		<TRANSISTOR>			
Q401	8-729-056-46	TRANSISTOR 2SC5053T100Q			
Q402	8-729-056-46	TRANSISTOR 2SC5053T100Q			
Q403	8-729-424-08	TRANSISTOR UN2111-TX			
Q405	8-729-230-49	TRANSISTOR 2SC2712-YG-TE85L			
		<RESISTOR>			
R407	1-216-013-91	RES, CHIP	33	1/10W	5%
R408	1-216-073-91	RES, CHIP	10K	1/10W	5%
R409	1-216-073-91	RES, CHIP	10K	1/10W	5%
R411	1-216-065-91	RES, CHIP	4.7K	1/10W	5%
R412	1-216-049-91	RES, CHIP	1.0K	1/10W	5%
R413	1-216-047-91	RES, CHIP	820	1/10W	5%
R414	1-216-095-91	RES, CHIP	82K	1/10W	5%
R415	1-216-033-91	RES, CHIP	220	1/10W	5%
R416	1-216-049-91	RES, CHIP	1.0K	1/10W	5%
R417	1-216-069-91	RES, CHIP	6.8K	1/10W	5%
R418	1-216-027-91	RES, CHIP	120	1/10W	5%
R419	1-216-073-91	RES, CHIP	10K	1/10W	5%
		(NC675P: MX,E,AUS,SP)			
R421	1-216-073-91	RES, CHIP	10K	1/10W	5%
		(NC675P:US,CND,MX,E,AUS)			
	1-216-065-91	RES, CHIP	4.7K	1/10W	5%
		(NC675P: SP)			
R427	1-216-073-91	RES, CHIP	10K	1/10W	5%
R428	1-216-025-91	RES, CHIP	100	1/10W	5%
R429	1-216-097-91	RES, CHIP	100K	1/10W	5%
R432	1-216-097-91	RES, CHIP	100K	1/10W	5%
R433	1-216-065-91	RES, CHIP	4.7K	1/10W	5%
R434	1-216-097-91	RES, CHIP	100K	1/10W	5%
R437	1-216-073-91	RES, CHIP	10K	1/10W	5%
R442	1-216-025-91	RES, CHIP	100	1/10W	5%
R443	1-216-025-91	RES, CHIP	100	1/10W	5%
R444	1-216-025-91	RES, CHIP	100	1/10W	5%
R445	1-216-025-91	RES, CHIP	100	1/10W	5%
R446	1-216-025-91	RES, CHIP	100	1/10W	5%
R447	1-216-025-91	RES, CHIP	100	1/10W	5%
R448	1-216-025-91	RES, CHIP	100	1/10W	5%
R449	1-216-089-91	RES, CHIP	47K	1/10W	5%
R450	1-216-089-91	RES, CHIP	47K	1/10W	5%
R451	1-216-073-91	RES, CHIP	10K	1/10W	5%
R452	1-216-073-91	RES, CHIP	10K	1/10W	5%
R453	1-216-073-91	RES, CHIP	10K	1/10W	5%
R454	1-216-049-91	RES, CHIP	1.0K	1/10W	5%
R460	1-216-073-91	RES, CHIP	10K	1/10W	5%
R490	1-216-083-91	RES, CHIP	27K	1/10W	5%
R491	1-216-027-91	RES, CHIP	120	1/10W	5%
		<TRANSFORMER>			
T401	1-443-225-11	DC-DC CONVERTER TRANSFORMER			
		<VIBRATOR>			
X401	1-781-472-21	VIBRATOR, CERAMIC			

A-6072-113-A MV-044 BOARD COMPLETE (US,CND)
A-1062-850-A MV-044 BOARD COMPLETE (MX,E)
A-1062-852-A MV-044 BOARD COMPLETE (AUS)
A-1062-854-A MV-044 BOARD COMPLETE (SP)

		<CAPACITOR>			
C104	1-164-230-91	CAP,CERAMIC	220PF CH	5.00%	50V
C106	1-164-230-91	CAP,CERAMIC	220PF CH	5.00%	50V
C107	1-126-964-91	CAP, ELECT	10UF	20.00%	50V
C109	1-162-970-91	CAP, CERAMIC	10000PF B	10.00%	25V
C110	1-162-970-91	CAP, CERAMIC	10000PF B	10.00%	25V
C111	1-164-677-91	CAP,CERAMIC	33000PF B	10.00%	16V
C112	1-164-677-91	CAP,CERAMIC	33000PF B	10.00%	16V
C113	1-162-970-91	CAP, CERAMIC	10000PF B	10.00%	25V
C114	1-162-970-91	CAP, CERAMIC	10000PF B	10.00%	25V
C115	1-162-970-91	CAP, CERAMIC	10000PF B	10.00%	25V
C116	1-162-964-91	CAP,CHIP CERAMIC	1000PF B	10.00%	50V
C117	1-162-970-91	CAP, CERAMIC	10000PF B	10.00%	25V
C119	1-162-970-91	CAP, CERAMIC	10000PF B	10.00%	25V
C120	1-107-826-91	CAP, CHIP CERAMIC	100000PF B	10.00%	16V
C121	1-107-826-91	CAP, CHIP CERAMIC	100000PF B	10.00%	16V
C122	1-107-826-91	CAP, CHIP CERAMIC	100000PF B	10.00%	16V
C123	1-162-970-91	CAP, CERAMIC	10000PF B	10.00%	25V
C124	1-126-964-91	CAP, ELECT	10UF	20.00%	50V
C125	1-126-947-11	CAP, ELECT	47UF	20.00%	16V
C126	1-126-947-11	CAP, ELECT	47UF	20.00%	16V
C132	1-107-826-91	CAP, CHIP CERAMIC	100000PF B	10.00%	16V
C138	1-107-826-91	CAP, CHIP CERAMIC	100000PF B	10.00%	16V
C139	1-126-964-91	CAP, ELECT	10UF	20.00%	50V

MV-044

Ref. No.	Part No.	Description	Remark
C140	1-107-826-91	CAP, CHIP CERAMIC 100000PF B 10.00%	16V
C141	1-126-964-91	CAP, ELECT 10UF 20.00%	50V
C142	1-107-826-91	CAP, CHIP CERAMIC 100000PF B 10.00%	16V
C143	1-126-964-91	CAP, ELECT 10UF 20.00%	50V
C144	1-162-966-91	CAP,CHIP CERAMIC 2200PF B 10.00%	50V
C145	1-162-966-91	CAP,CHIP CERAMIC 2200PF B 10.00%	50V
C148	1-162-968-91	CAP,CHIP CERAMIC 4700PF B 10.00%	50V
C152	1-115-467-91	CAP, CHIP CERAMIC 0.22UF B 10.00%	10V
C153	1-126-947-11	CAP, ELECT 47UF 20.00%	16V
C154	1-162-970-91	CAP, CERAMIC 10000PF B 10.00%	25V
C161	1-115-467-91	CAP, CHIP CERAMIC 0.22UF B 10.00%	10V
C165	1-162-970-91	CAP, CERAMIC 10000PF B 10.00%	25V
C166	1-162-970-91	CAP, CERAMIC 10000PF B 10.00%	25V
C168	1-126-947-11	CAP, ELECT 47UF 20.00%	16V
C169	1-162-970-91	CAP, CERAMIC 10000PF B 10.00%	25V
C171	1-126-947-11	CAP, ELECT 47UF 20.00%	16V
C172	1-162-970-91	CAP, CERAMIC 10000PF B 10.00%	25V
C173	1-107-826-91	CAP, CHIP CERAMIC 100000PF B 10.00%	16V
C175	1-107-826-91	CAP, CHIP CERAMIC 100000PF B 10.00%	16V
C176	1-162-970-91	CAP, CERAMIC 10000PF B 10.00%	25V
C177	1-165-908-91	CAP, CERAMIC 1000000PF B 10%	10V
C178	1-165-908-91	CAP, CERAMIC 1000000PF B 10%	10V
C179	1-165-908-91	CAP, CERAMIC 1000000PF B 10%	10V
C180	1-165-908-91	CAP, CERAMIC 1000000PF B 10%	10V
C181	1-165-908-91	CAP, CERAMIC 1000000PF B 10%	10V
C184	1-164-315-91	CAP, CERAMIC 470PF CH 5.00%	50V
C185	1-107-826-91	CAP, CHIP CERAMIC 100000PF B 10.00%	16V
C186	1-107-826-91	CAP, CHIP CERAMIC 100000PF B 10.00%	16V
C189	1-107-826-91	CAP, CHIP CERAMIC 100000PF B 10.00%	16V
C190	1-164-245-91	CAP,CERAMIC 15000PF B 10.00%	25V
C193	1-107-826-91	CAP, CHIP CERAMIC 100000PF B 10.00%	16V
C194	1-164-245-91	CAP,CERAMIC 15000PF B 10.00%	25V
C197	1-164-677-91	CAP,CERAMIC 33000PF B 10.00%	16V
C198	1-162-926-91	CAP, CERAMIC 82PF CH 5.00%	50V
C199	1-164-392-91	CAP, CERAMIC 390PF CH 5.00%	50V
C202	1-115-467-91	CAP, CHIP CERAMIC 0.22UF B 10.00%	10V
C203	1-162-970-91	CAP, CERAMIC 10000PF B 10.00%	25V
C207	1-115-467-91	CAP, CHIP CERAMIC 0.22UF B 10.00%	10V
C209	1-162-970-91	CAP, CERAMIC 10000PF B 10.00%	25V
C212	1-162-927-91	CAP, CERAMIC 100PF CH 5.00%	50V
C213	1-162-970-91	CAP, CERAMIC 10000PF B 10.00%	25V
C214	1-107-826-91	CAP, CHIP CERAMIC 100000PF B 10.00%	16V
C215	1-165-908-91	CAP, CERAMIC 1000000PF B 10%	10V
C216	1-126-947-11	CAP, ELECT 47UF 20.00%	16V
C218	1-162-970-91	CAP, CERAMIC 10000PF B 10.00%	25V
C219	1-162-970-91	CAP, CERAMIC 10000PF 10.00%	25V
C220	1-126-947-11	CAP, ELECT 47UF 20.00%	16V
C222	1-162-970-91	CAP, CERAMIC 10000PF 10.00%	25V
C223	1-162-970-91	CAP, CERAMIC 10000PF 10.00%	25V
C224	1-162-970-91	CAP, CERAMIC 10000PF 10.00%	25V
C225	1-162-970-91	CAP, CERAMIC 10000PF 10.00%	25V
C227	1-162-970-91	CAP, CERAMIC 10000PF B 10.00%	25V
C229	1-107-826-91	CAP, CHIP CERAMIC 100000PF B 10.00%	16V
C231	1-107-826-91	CAP, CHIP CERAMIC 100000PF B 10.00%	16V
C232	1-125-889-91	CAP, CHIP CERAMIC 2.2UF 10%	10V
C235	1-162-964-91	CAP,CHIP CERAMIC 1000PF B 10.00%	50V
C236	1-162-970-91	CAP, CERAMIC 10000PF B 10.00%	25V
C237	1-107-826-91	CAP, CHIP CERAMIC 100000PF B 10.00%	16V
C239	1-126-947-11	CAP, ELECT 47UF 20.00%	16V
C240	1-162-970-91	CAP, CERAMIC 10000PF B 10.00%	25V
C241	1-162-970-91	CAP, CERAMIC 10000PF B 10.00%	25V
C243	1-162-970-91	CAP, CERAMIC 10000PF B 10.00%	25V
C244	1-162-915-91	CAP, CERAMIC 10PF CH 0.50PF (NC675P: US,CND,E,MX)	50V
	1-162-916-91	CAP, CERAMIC 12PF 5.00% (NC675P: SP,AUS)	50V
C245	1-162-915-91	CAP, CERAMIC 10PF 5.00% (NC675P: SP,AUS)	50V
	1-162-916-91	CAP, CERAMIC 12PF CH 5.00% (NC675P: US,CND,E,MX)	50V
C246	1-162-970-91	CAP, CERAMIC 10000PF B 10.00%	25V
C247	1-162-970-91	CAP, CERAMIC 10000PF B 10.00%	25V
C248	1-162-970-91	CAP, CERAMIC 10000PF B 10.00%	25V
C249	1-162-970-91	CAP, CERAMIC 10000PF B 10.00%	25V
C250	1-162-970-91	CAP, CERAMIC 10000PF B 10.00%	25V
C251	1-107-826-91	CAP, CHIP CERAMIC 100000PF B 10.00%	16V
C252	1-107-826-91	CAP, CHIP CERAMIC 100000PF B 10.00%	16V
C255	1-162-970-91	CAP, CERAMIC 10000PF B 10.00%	25V
C256	1-162-970-91	CAP, CERAMIC 10000PF B 10.00%	25V
C257	1-162-970-91	CAP, CERAMIC 10000PF B 10.00%	25V
C258	1-162-964-91	CAP,CHIP CERAMIC 1000PF B 10.00%	50V
C259	1-115-467-91	CAP, CHIP CERAMIC 0.22UF B 10.00%	10V
C260	1-126-947-11	CAP, ELECT 47UF 20.00%	16V
C262	1-115-467-91	CAP, CHIP CERAMIC 0.22UF B 10.00%	10V
C263	1-162-970-91	CAP, CERAMIC 10000PF B 10.00%	25V
C264	1-126-947-11	CAP, ELECT 47UF 20.00%	16V
C265	1-126-964-91	CAP, ELECT 10UF 20.00%	50V
C266	1-115-467-91	CAP, CHIP CERAMIC 0.22UF B 10.00%	10V
C267	1-107-826-91	CAP, CHIP CERAMIC 100000PF B 10.00%	16V
C268	1-162-970-91	CAP, CERAMIC 10000PF B 10.00%	25V
C269	1-126-947-11	CAP, ELECT 47UF 20.00%	16V
C270	1-126-947-11	CAP, ELECT 47UF 20.00%	16V
C273	1-162-927-91	CAP, CERAMIC 100PF CH 5.00%	50V
C276	1-125-889-91	CAP, CHIP CERAMIC 2.2UF 10%	10V
C280	1-107-826-91	CAP, CHIP CERAMIC 100000PF B 10.00%	16V
C281	1-107-826-91	CAP, CHIP CERAMIC 100000PF B 10.00%	16V
C501	1-162-970-91	CAP, CERAMIC 10000PF B 10.00%	25V
C502	1-126-947-11	CAP, ELECT 47UF 20.00%	16V
C507	1-126-947-11	CAP, ELECT 47UF 20.00%	16V
C509	1-107-826-91	CAP, CHIP CERAMIC 100000PF B 10.00%	16V
C510	1-126-947-11	CAP, ELECT 47UF 20.00%	16V
C511	1-126-947-11	CAP, ELECT 47UF 20.00%	16V
C512	1-107-826-91	CAP, CHIP CERAMIC 100000PF B 10.00%	16V
C513	1-126-947-11	CAP, ELECT 47UF 20.00%	16V
C514	1-107-826-91	CAP, CHIP CERAMIC 100000PF B 10.00%	16V
C601	1-164-739-91	CAP, CERAMIC 560PF CH 5.00%	50V
C602	1-164-739-91	CAP, CERAMIC 560PF CH 5.00%	50V
C603	1-164-218-91	CAP,CERAMIC 180PF CH 5.00%	
C604	1-164-218-91	CAP,CERAMIC 180PF CH 5.00%	50V
C605	1-164-218-91	CAP,CERAMIC 180PF CH 5.00%	50V
C606	1-164-218-91	CAP,CERAMIC 180PF CH 5.00%	50V
C607	1-162-970-91	CAP, CERAMIC 10000PF B 10.00%	25V
C608	1-162-970-91	CAP, CERAMIC 10000PF B 10.00%	25V
C609	1-126-960-91	CAP, ELECT 1.0UF 20.00%	50V
C610	1-126-947-11	CAP, ELECT 47UF 20.00%	16V
C611	1-126-947-11	CAP, ELECT 47UF 20.00%	16V
C613	1-126-934-91	CAP, ELECT 220UF 20.00%	16V
C615	1-164-230-91	CAP,CERAMIC 220PF CH 5.00%	50V
C616	1-164-230-91	CAP,CERAMIC 220PF CH 5.00%	50V
C622	1-162-970-91	CAP, CERAMIC 10000PF B 10.00%	25V
C625	1-162-970-91	CAP, CERAMIC 10000PF B 10.00%	25V

Ref. No.	Part No.	Description	Remark
C627	1-126-947-11	CAP, ELECT 47UF 20.00% 16V	
C628	1-126-947-11	CAP, ELECT 47UF 20.00% 16V	
C629	1-126-947-11	CAP, ELECT 47UF 20.00% 16V	
C644	1-126-947-11	CAP, ELECT 47UF 20.00% 16V	
C771	1-162-970-91	CAP, CERAMIC 10000PF B 10.00% 25V	
C776	1-126-947-11	CAP, ELECT 47UF 20.00% 16V	
C778	1-162-970-91	CAP, CERAMIC 10000PF B 10.00% 25V	
C779	1-115-467-91	CAP, CHIP CERAMIC 0.22UF B 10.00% 10V	
C780	1-162-970-91	CAP, CERAMIC 10000PF B 10.00% 25V	
C782	1-162-970-91	CAP, CERAMIC 10000PF B 10.00% 25V	
C783	1-162-970-91	CAP, CERAMIC 10000PF B 10.00% 25V	
C784	1-126-947-11	CAP, ELECT 47UF 20.00% 16V	
C789	1-115-467-91	CAP, CHIP CERAMIC 022UF B 10.00% 10V	
C790	1-162-970-91	CAP, CERAMIC 10000PF B 10.00% 25V	
		<CONNECTOR>	
CN101	1-815-381-11	CONNECTOR, FPC/FFC 5P	
CN103	1-815-763-32	CONNECTOR, FFC/FPC 24P	
CN104	1-564-708-11	PIN, CONNECTOR (SMALL TYPE) 6P	
CN201	1-818-174-11	CONNECTOR, FPC/FFC 13P	
CN204	1-564-708-11	PIN, CONNECTOR (SMALL TYPE) 6P	
CN207	1-568-934-11	PIN, CONNECTOR 7P	
CN771	1-568-937-11	PIN, CONNECTOR 10P	
		<DIODE>	
D508	8-719-071-15	DIODE HZM6.8ZWA1TL	
D509	8-719-071-15	DIODE HZM6.8ZWA1TL	
D601	8-719-914-47	DIODE DAN202K-T-146	
D602	8-719-914-45	DIODE DAP202K-T-146	
D604	8-719-988-61	DIODE 1SS355TE-17	
		<FERRITE>	
FB176	1-469-670-21	FERRITE, EMI (SMD) 0UH	
FB201	1-469-324-21	FERRITE, EMI (SMD) 0UH	
FB202	1-469-324-21	FERRITE, EMI (SMD) 0UH	
FB203	1-469-324-21	FERRITE, EMI (SMD) 0UH	
FB204	1-469-324-21	FERRITE, EMI (SMD) 0UH	
FB205	1-469-324-21	FERRITE, EMI (SMD) 0UH	
FB206	1-469-324-21	FERRITE, EMI (SMD) 0UH	
FB215	1-469-670-21	FERRITE, EMI (SMD) 0UH	
FB249	1-469-670-21	FERRITE, EMI (SMD) 0UH	
FB251	1-469-670-21	FERRITE, EMI (SMD) 0UH	
FB252	1-469-670-21	FERRITE, EMI (SMD) 0UH	
FB255	1-469-118-21	FERRITE, EMI (SMD) 0UH	
FB290	1-469-118-21	FERRITE, EMI (SMD) 0UH	
FB291	1-469-118-21	FERRITE, EMI (SMD) 0UH	
FB292	1-469-118-21	FERRITE, EMI (SMD) 0UH	
FB293	1-469-118-21	FERRITE, EMI (SMD) 0UH	
FB294	1-469-118-21	FERRITE, EMI (SMD) 0UH	
FB295	1-469-118-21	FERRITE, EMI (SMD) 0UH	
FB525	1-469-324-21	FERRITE, EMI (SMD) 0UH	
FB555	1-469-324-21	FERRITE, EMI (SMD) 0UH	
FB1022	1-469-670-21	FERRITE, EMI (SMD) 0UH	
FB1023	1-469-670-21	FERRITE, EMI (SMD) 0UH	
FB1024	1-469-324-21	FERRITE, EMI (SMD) 0UH	
FB2036	1-469-670-21	FERRITE, EMI (SMD) 0UH	
FB2041	1-469-324-21	FERRITE, EMI (SMD) 0UH	

Ref. No.	Part No.	Description	Remark
		<FILTER>	
FL207	1-234-177-21	FILTER, CHIP EMI 0UH	
FL208	1-234-177-21	FILTER, CHIP EMI 0UH	
FL209	1-233-893-21	FILTER, CHIP EMI	
		<IC>	
IC101	6-704-524-01	IC FAN8036L	
IC102	6-704-471-01	IC CXD9780R	
IC151	6-704-470-01	IC TK11233CMCL-G	
IC201	6-704-472-01	IC CXD9781R	
IC202	6-704-261-01	IC TK11225CMCL-G	
IC204	6-805-801-01	IC MR27V1602F-25KTN(US,CND,MX,E)	
IC204	6-805-803-01	IC MR27V1602F-25MTN(AUS)	
IC204	6-805-802-01	IC MR27V1602F-25LTN(SP)	
IC206	6-704-893-01	IC GLT5640L16P-7TC	
IC207	6-705-515-01	IC AK4385VT-E2	
IC208	6-702-302-01	IC TK11133CSCL-G	
IC502	6-701-820-01	IC LA73053-TLM-E	
IC503	8-759-662-86	IC NJM79M05DL1A(TE2)	
IC601	8-759-249-16	IC NJM4558M-TE2	
IC603	6-706-025-01	IC HA178L05UA-TL-E	
IC604	6-600-185-01	IC GP1FA553TZOF	
IC774	6-702-302-01	IC TK11133CSCL-G	
		<JACK>	
J501	1-818-223-11	PHONO COMBO JACK (7P+S-VIDEO) P	
		<JUMPER RESISTOR>	
JS002	1-216-295-71	CONDUCTOR, CHIP 0	
JS003	1-216-295-71	CONDUCTOR, CHIP 0	
		<LEAD PIN>	
LP701	1-780-019-11	WIRE CLIP	
		<RINK IC>	
⚠ PS771	1-576-509-21	RINK, IC 1A	
⚠ PS772	1-576-509-21	RINK, IC 1A	
		<TRANSISTOR>	
Q168	8-729-424-63	TRANSISTOR UN2212-TX	
Q170	6-550-008-01	TRANSISTOR UM6K1N-TN	
Q171	6-550-653-01	TRANSISTOR QST8TR	
Q504	8-729-024-89	TRANSISTOR MUN2213T1	
Q505	8-729-024-83	TRANSISTOR MUN2111T1	
Q601	8-729-010-10	TRANSISTOR MSB710-RT1	
Q602	8-729-024-89	TRANSISTOR MUN2213T1	
Q603	8-729-010-25	TRANSISTOR MSD601-RT1	
Q604	8-729-424-72	TRANSISTOR UN2217-QRS-TX	
Q605	8-729-010-05	TRANSISTOR MSB709-RT1	

Note :
The components identified by mark ⚠ or dotted line with mark ⚠ are critical for safety.
Replace only with part number specified.

Note :
Les composants identifiés par une marque ⚠ sont critiques pour la sécurité.
Ne les remplacer que par une pièce portant le numéro spécifié.

MV-044

Ref. No.	Part No.	Description				Remark
Q607	6-550-137-01	TRANSISTOR2SD1938(F)-ST(TX).SO				
Q608	6-550-137-01	TRANSISTOR2SD1938(F)-ST(TX).SO				
Q611	8-729-010-25	TRANSISTOR MSD601-RT1				
Q616	8-729-010-05	TRANSISTOR MSB709-RT1				
Q772	8-729-048-28	TRANSISTOR 2SD1766-T100-QR				
Q773	8-729-424-11	TRANSISTOR UN2111-TX				
		<RESISTOR>				
R101	1-216-833-91	RES, CHIP	10K	1/10W	5%	
R102	1-216-833-91	RES, CHIP	10K	1/10W	5%	
R103	1-216-839-91	RES, CHIP	33K	1/10W	5%	
R104	1-216-839-91	RES, CHIP	33K	1/10W	5%	
R107	1-216-833-91	RES, CHIP	10K	1/10W	5%	
R109	1-216-834-91	RES, CHIP	12K	1/10W	5%	
R110	1-216-822-91	RES, CHIP	1.2K	1/10W	5%	
R111	1-216-835-91	RES, CHIP	15K	1/10W	5%	
R112	1-216-826-91	RES, CHIP	2.7K	1/10W	5%	
R114	1-216-833-91	RES, CHIP	10K	1/10W	5%	
R117	1-216-834-91	RES, CHIP	12K	1/10W	5%	
R119	1-216-841-91	RES, CHIP	47K	1/10W	5%	
R120	1-218-895-91	RES, CHIP	100K	1/10W	0.5%	
R121	1-218-895-91	RES, CHIP	100K	1/10W	0.5%	
R122	1-218-889-91	RES, CHIP	56K	1/10W	0.5%	
R123	1-218-889-91	RES, CHIP	56K	1/10W	0.5%	
R124	1-218-867-11	RES, CHIP	6.8K	1/10W	5%	
R126	1-216-838-91	RES, CHIP	27K	1/10W	5%	
R127	1-216-833-91	RES, CHIP	10K	1/10W	5%	
R129	1-218-893-91	RES, CHIP	82K	1/10W	0.5%	
R130	1-218-877-91	RES, CHIP	18K	1/10W	0.5%	
R131	1-218-883-91	RES, CHIP	33K	1/10W	0.5%	
R132	1-216-833-91	RES, CHIP	10K	1/10W	5%	
R135	1-216-839-91	RES, CHIP	33K	1/10W	5%	
R136	1-218-875-91	RES, CHIP	15K	1/10W	0.5%	
R163	1-216-864-91	CONDUCTOR, CHIP	0			
R164	1-216-864-91	CONDUCTOR, CHIP	0			
R172	1-216-845-91	RES, CHIP	100K	1/10W	5%	
R173	1-216-845-91	RES, CHIP	100K	1/10W	5%	
R175	1-216-809-91	RES, CHIP	100	1/10W	5%	
R178	1-211-977-91	RES, CHIP	22	1/10W	0.5%	
R179	1-216-801-91	RES, CHIP	22	1/10W	5%	
R180	1-216-809-91	RES, CHIP	100	1/10W	5%	
R181	1-216-821-91	RES, CHIP	1.0K	1/10W	5%	
R182	1-216-841-91	RES, CHIP	47K	1/10W	5%	
R183	1-211-977-91	RES, CHIP	22	1/10W	0.5%	
R184	1-211-977-91	RES, CHIP	22	1/10W	0.5%	
R185	1-216-857-91	RES, CHIP	1.0M	1/10W	5%	
R186	1-216-841-91	RES, CHIP	47K	1/10W	5%	
R187	1-216-864-91	CONDUCTOR, CHIP	0			
R188	1-216-801-91	RES, CHIP	22	1/10W	5%	
R189	1-216-801-91	RES, CHIP	22	1/10W	5%	
R190	1-216-864-91	CONDUCTOR, CHIP	0			
R191	1-216-864-91	CONDUCTOR, CHIP	0			
R192	1-216-841-91	RES, CHIP	47K	1/10W	5%	
R194	1-216-864-91	CONDUCTOR, CHIP	0			
R195	1-216-833-91	RES, CHIP	10K	1/10W	5%	
R197	1-216-829-91	RES, CHIP	4.7K	1/10W	5%	
R198	1-216-821-91	RES, CHIP	1.0K	1/10W	5%	
R199	1-216-835-91	RES, CHIP	15K	1/10W	5%	

Ref. No.	Part No.	Description				Remark
R201	1-216-864-91	CONDUCTOR, CHIP	0			
R208	1-216-864-91	CONDUCTOR, CHIP	0			
R213	1-216-833-91	RES, CHIP	10K	1/10W	5%	
R216	1-216-833-91	RES, CHIP	10K	1/10W	5%	
R220	1-216-832-91	RES, CHIP	8.2K	1/10W	5%	
R221	1-216-833-91	RES, CHIP	10K	1/10W	5%	
R222	1-216-833-91	RES, CHIP	10K	1/10W	5%	
R223	1-216-833-91	RES, CHIP	10K	1/10W	5%	
R224	1-216-864-91	CONDUCTOR, CHIP	0			
R225	1-216-821-91	RES, CHIP	1.0K	1/10W	5%	
R226	1-216-821-91	RES, CHIP	1.0K	1/10W	5%	
R227	1-216-845-91	RES, CHIP	100K	1/10W	5%	
R229	1-216-864-91	CONDUCTOR, CHIP	0			
R244	1-216-836-91	RES, CHIP	18K	1/10W	5%	
R247	1-216-809-91	RES, CHIP	100	1/10W	5%	
R248	1-216-845-91	RES, CHIP	100K	1/10W	5%	
R253	1-216-805-91	RES, CHIP	47	1/10W	5%	
R258	1-216-809-91	RES, CHIP	100	1/10W	5%	
R260	1-216-801-91	RES, CHIP	22	1/10W	5%	
R261	1-216-805-91	RES, CHIP	47	1/10W	5%	
R263	1-211-990-91	RES, CHIP	75	1/10W	0.5%	
R264	1-211-990-91	RES, CHIP	75	1/10W	0.5%	
R265	1-211-990-91	RES, CHIP	75	1/10W	0.5%	
R266	1-211-990-91	RES, CHIP	75	1/10W	0.5%	
R267	1-211-990-91	RES, CHIP	75	1/10W	0.5%	
R268	1-211-990-91	RES, CHIP	75	1/10W	0.5%	
R272	1-469-836-21	INDUCTOR, FERRITE BEAD	0			
R276	1-218-841-91	RES, CHIP	560	1/10W	0.5%	
R279	1-216-809-91	RES, CHIP	100	1/10W	5%	
R280	1-216-826-91	RES, CHIP	2.7K	1/10W	5%	
R284	1-216-805-91	RES, CHIP	47	1/10W	5%	
R285	1-216-805-91	RES, CHIP	47	1/10W	5%	
R286	1-216-805-91	RES, CHIP	47	1/10W	5%	
R287	1-216-805-91	RES, CHIP	47	1/10W	5%	
R288	1-216-805-91	RES, CHIP	47	1/10W	5%	
R289	1-202-930-91	RES, CHIP	750K	1/10W	5%	
R298	1-216-864-91	CONDUCTOR, CHIP	0			
R521	1-216-833-91	RES, CHIP	10K	1/10W	5%	
R527	1-211-990-91	RES, CHIP	75	1/10W	0.5%	
R528	1-211-990-91	RES, CHIP	75	1/10W	0.5%	
R529	1-216-833-91	RES, CHIP	10K	1/10W	5%	
R530	1-211-990-91	RES, CHIP	75	1/10W	0.5%	
R532	1-216-864-91	CONDUCTOR, CHIP		0		
R533	1-211-990-91	RES, CHIP	75	1/10W	0.5%	
R534	1-211-990-91	RES, CHIP	75	1/10W	0.5%	
R535	1-211-990-91	RES, CHIP	75	1/10W	0.5%	
R547	1-216-864-91	CONDUCTOR, CHIP	0			
R548	1-216-864-91	CONDUCTOR, CHIP	0			
R549	1-216-864-91	CONDUCTOR, CHIP	0			
R554	1-216-864-91	CONDUCTOR, CHIP	0			
R556	1-216-864-91	CONDUCTOR, CHIP				
R557	1-216-864-91	CONDUCTOR, CHIP				
R575	1-216-864-91	CONDUCTOR, CHIP	0			
R582	1-216-864-91	CONDUCTOR, CHIP	0			
R598	1-216-295-71	CONDUCTOR, CHIP	0			
R601	1-208-798-91	RES, CHIP	4.7K	1/10W	0.5%	
R602	1-208-798-91	RES, CHIP	4.7K	1/10W	0.5%	
R603	1-208-798-91	RES, CHIP	4.7K	1/10W	0.5%	
R604	1-208-798-91	RES, CHIP	4.7K	1/10W	0.5%	
R605	1-208-800-91	RES, CHIP	5.6K	1/10W	0.5%	

MV-044 **SW-423**

Ref. No.	Part No.	Description			Remark
R606	1-208-800-91	RES, CHIP	5.6K	1/10W	0.5%
R607	1-216-825-91	RES, CHIP	2.2K	1/10W	5%
R608	1-216-825-91	RES, CHIP	2.2K	1/10W	5%
R609	1-216-825-91	RES, CHIP	2.2K	1/10W	5%
R610	1-216-825-91	RES, CHIP	2.2K	1/10W	5%
R611	1-208-800-91	RES, CHIP	5.6K	1/10W	0.5%
R612	1-208-800-91	RES, CHIP	5.6K	1/10W	0.5%
R613	1-216-829-91	RES, CHIP	4.7K	1/10W	5%
R616	1-216-830-91	RES, CHIP	5.6K	1/10W	5%
R617	1-216-833-91	RES, CHIP	10K	1/10W	5%
R618	1-216-845-91	RES, CHIP	100K	1/10W	5%
R619	1-216-849-91	RES, CHIP	220K	1/10W	5%
R620	1-216-817-91	RES, CHIP	470	1/10W	5%
R621	1-216-833-91	RES, CHIP	10K	1/10W	5%
R622	1-216-833-91	RES, CHIP	10K	1/10W	5%
R624	1-216-833-91	RES, CHIP	10K	1/10W	5%
R625	1-216-841-91	RES, CHIP	47K	1/10W	5%
R626	1-216-817-91	RES, CHIP	470	1/10W	5%
R627	1-216-817-91	RES, CHIP	470	1/10W	5%
R628	1-216-833-91	RES, CHIP	10K	1/10W	5%
R629	1-216-841-91	RES, CHIP	47K	1/10W	5%
R630	1-216-841-91	RES, CHIP	47K	1/10W	5%
R634	1-216-829-91	RES, CHIP	4.7K	1/10W	5%
R635	1-216-829-91	RES, CHIP	4.7K	1/10W	5%
R638	1-216-845-91	RES, CHIP	100K	1/10W	5%
R640	1-216-817-91	RES, CHIP	470	1/10W	5%
R641	1-216-817-91	RES, CHIP	470	1/10W	5%
R642	1-216-864-91	CONDUCTOR, CHIP	0		
R643	1-216-864-91	CONDUCTOR, CHIP	0		
R649	1-216-813-91	RES, CHIP	220	1/10W	5%
R651	1-216-807-91	RES, CHIP	68	1/10W	5%
R652	1-216-833-91	RES, CHIP	10K	1/10W	5%
R653	1-216-821-91	RES, CHIP	1.0K	1/10W	5%
R654	1-216-821-91	RES, CHIP	1.0K	1/10W	5%
R656	1-216-821-91	RES, CHIP	1.0K	1/10W	5%
R668	1-216-864-91	CONDUCTOR, CHIP	0		
R684	1-216-830-91	RES, CHIP	5.6K	1/10W	5%
R775	1-216-833-91	RES, CHIP	10K	1/10W	5%
R776	1-216-827-91	RES, CHIP	3.3K	1/10W	5%
R777	1-216-827-91	RES, CHIP	3.3K	1/10W	5%
R787	1-216-864-91	CONDUCTOR, CHIP	0		
R1015	1-216-809-91	RES, CHIP	100	1/10W	5%
R1018	1-216-864-91	CONDUCTOR, CHIP	0		
R1021	1-216-864-91	CONDUCTOR, CHIP	0		
R1026	1-216-833-91	RES, CHIP	10K	1/10W	5%
R1027	1-216-833-91	RES, CHIP	10K	1/10W	5%
R1031	1-216-833-91	RES, CHIP	10K	1/10W	5%
R2019	1-216-809-91	RES, CHIP	100	1/10W	5%
R2027	1-216-864-91	CONDUCTOR, CHIP	0		
R2028	1-216-833-91	RES, CHIP	10K	1/10W	5%
R2030	1-216-833-91	RES, CHIP	10K	1/10W	5%
R2031	1-216-805-91	RES, CHIP	47	1/10W	5%
R2032	1-216-805-91	RES, CHIP	47	1/10W	5%
R2033	1-216-805-91	RES, CHIP	47	1/10W	5%
R2034	1-216-805-91	RES, CHIP	47	1/10W	5%
R2036	1-216-295-71	CONDUCTOR, CHIP	0		

Ref. No.	Part No.	Description			Remark
		<NETWORK>			
RB204	1-234-371-21	RES, NETWORK	47X4	1/32W	5%
RB205	1-234-371-21	RES, NETWORK	47X4	1/32W	5%
RB206	1-234-371-21	RES, NETWORK	47X4	1/32W	5%
		<SWITCH>			
S501	1-762-636-11	SWITCH, SLIDE			
		<CRYSTAL>			
X202	1-813-219-11	QUARTZ CRYSTAL UNIT (NC675P: US, CND, E, MX)			
X202	1-813-218-21	QUARTZ CRYSTAL UNIT (NC675P: SP, AUS)			

SW-423 BOARD COMPLETE
****

		<CAPACITOR>			
C501	1-162-970-91	CAP, CERAMIC	10000PF B	10.00%	25V
C502	1-124-589-11	CAP, ELECT	47UF	20.00%	16V
		<CONNECTOR>			
CN501	1-817-416-11	CONNECTOR FPC/FFC (11P)			
CN502	1-750-195-11	CONNECTOR, BOARD TO BOARD 6P			
		<DIODE>			
D501	8-719-070-75	DIODE SLR-342DCT32			
		<IC>			
IC50	6-600-256-01	IC GP1UE27SXK0F7			
		<CONDUCTOR>			
JR501	1-216-295-71	CONDUCTOR, CHIP	0		
JR502	1-216-295-71	CONDUCTOR, CHIP	0		
JR503	1-216-295-71	CONDUCTOR, CHIP	0		
JR504	1-216-295-71	CONDUCTOR, CHIP	0		
JR505	1-216-295-71	CONDUCTOR, CHIP	0		
JR506	1-216-295-71	CONDUCTOR, CHIP	0		
JR507	1-216-295-71	CONDUCTOR, CHIP	0		
JR508	1-216-295-71	CONDUCTOR, CHIP	0		
		<RESISTOR>			
R502	1-216-017-91	RES, CHIP	47	1/10W	5%
R504	1-216-059-91	RES, CHIP	2.7K	1/10W	5%
R505	1-216-063-91	RES, CHIP	3.9K	1/10W	5%

SW-423

Ref. No.	Part No.	Description			Remark
R506	1-216-071-91	RES, CHIP	8.2K	1/10W	5%
R507	1-216-081-91	RES, CHIP	22K	1/10W	5%
R508	1-216-059-91	RES, CHIP	2.7K	1/10W	5%
R509	1-216-063-91	RES, CHIP	3.9K	1/10W	5%
R510	1-216-071-91	RES, CHIP	8.2K	1/10W	5%
R511	1-216-081-91	RES, CHIP	22K	1/10W	5%
R512	1-216-059-91	RES, CHIP	2.7K	1/10W	5%
R513	1-216-063-91	RES, CHIP	3.9K	1/10W	5%
		<SWITCH>			
S501	1-762-875-21	SWITCH, KEYBOARD			
S502	1-762-875-21	SWITCH, KEYBOARD			
S503	1-762-875-21	SWITCH, KEYBOARD			
S504	1-762-875-21	SWITCH, KEYBOARD			
S505	1-762-875-21	SWITCH, KEYBOARD			
S506	1-762-875-21	SWITCH, KEYBOARD			
S507	1-762-875-21	SWITCH, KEYBOARD			
S508	1-762-875-21	SWITCH, KEYBOARD			
S510	1-762-875-21	SWITCH, KEYBOARD			
S511	1-762-875-21	SWITCH, KEYBOARD			
S512	1-762-875-21	SWITCH, KEYBOARD			
S513	1-762-875-21	SWITCH, KEYBOARD			
S514	1-762-875-21	SWITCH, KEYBOARD			

⚠	1-478-538-11	POWER BLOCK (SRV1487UC) (US,CND,MX) **********	
		<FUSE>	
⚠F101	9-885-052-78	CATRIDGE FUSE	125V/2A

Ref. No.	Part No.	Description		Remark
		<CHIP FUSE>		
P311	9-885-052-80	CHIP FUSE	2A	
P312	9-885-052-81	CHIP FUSE	2A	

⚠	1-478-539-12	POWER BLOCK (SRV1501WW) (E,SP,AUS) **********	
		<FUSE>	
⚠F101	9-885-052-79	CATRIDGE FUSE	250V/2A
P311	9-885-052-80	CHIP FUSE	2A
P312	9-885052-81	CHIP FUSE	2A

		ACCESSORIES **********
	1-478-546-11	REMOTE COMMANDER (RMT-D168A) (US, CND, MX,E)
	1-478-546-21	REMOTE COMMANDER (RMT-DA168P) (AUS,SP)
	1-824-933-21	CORD, CONNECTION (AV)
	1-569-008-22	ADAPTOR, CONVERSION 2P (E)
	3-091-203-15	MANUAL INSTRUCTION (BRITISH ENGLISH) (AUS)
	3-091-203-25	MANUAL INSTRUCTION (BRITISH ENGLISH) (SP)
	3-091-202-13	MANUAL INSTRUCTION (US ENGLISH) (US,CND)
	3-091-202-24	MANUAL INSTRUCTION (FRENCH) (CND)
	3-091-202-34	MANUAL INSTRUCTION (SPANISH) (MX,E)

Note : The components identified by mark ⚠ or dotted line with mark ⚠ are critical for safety. Replace only with part number specified.	**Note :** Les composants identifiés par une marque ⚠ sont critiques pour la sécurité. Ne les remplacer que par une pièce portant le numéro spécifié.

9-874-814-13

Sony Corporation
Home Electronics Network Company

2005H0800-1
2005.08
Published by Quality Assurance Dept.